LISI AEROSPACE – Please refer to Central Documentation Website to check validity

5300039-( )( )

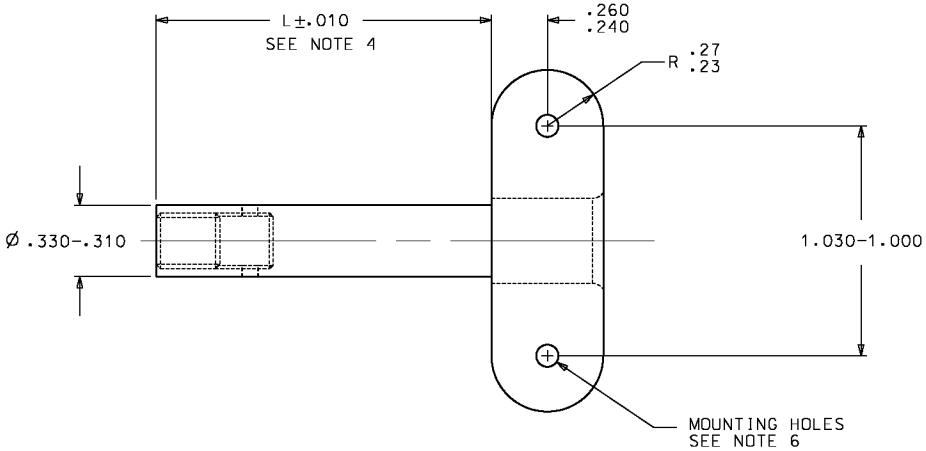

NOTES: (UNLESS OTHERWISE SPECIFIED)

1. MATERIAL: 2014-T6 ALUMINUM PER QQ-A-367 COMPOSITION 5
2. FINISH: CHEMICAL CONVERSION COATING PER MIL-C-5541, CL 1A
2.1 HELICAL INSERT:
SUFFIX "W" = DRY FILM LUBE (MS21209F1-15L)
NO SUFFIX = NO DRY FILM LUBE (MS21209F1-15)
SUFFIX "Y" = CADMIUM PLATE (MS21209F1-15P)
3. NO BURRS AND BREAK ALL SHARP EDGES
4. L = LENGTH IN .100 INCREMENTS
-1 = .100, -30 = 3.000
AVAILABLE IN .050 INCREMENTS (-1.5 = .150)
5. -4 AND BELOW HAVE NO INSPECTION HOLE.
6. NO SUFFIX = .103/.098 DIA RIVET HOLES, NO LUBE ON INSERT
SUFFIX "A" = .135/.128 DIA RIVET HOLES
SUFFIX "C" = DEBURRED INSPECTION HOLE
SUFFIX "NH" = NO INSPECTION HOLE
SUFFIX "W" = INSERT WITH DRY FILM LUBE
7. MS21209 HELICAL INSERT INSTALLED PER MS 33537
8. PART CALLOUT:
5300039-( )( )( )( )( )
NO CODE = INSPECTION HOLE
"NH" CODE = NO INSPECTION HOLE
NO CODE = STANDARD INSERT FINISH
"W" CODE = DRY FILM LUBED INSERT
"Y" CODE = CADMIUM PLATED INSERT
NO CODE = INSPECTION HOLE NOT DEBURRED
"C" CODE = INSPECTION HOLE DEBURRED
NO CODE = .098-.103 DIA RIVET HOLES
"A" CODE = .128-.135 DIA RIVET HOLES
LENGTH CODE

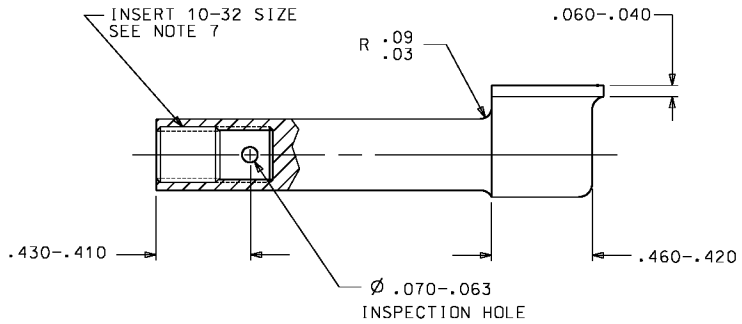

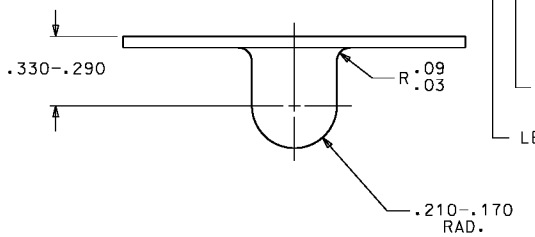

ISSUE	DESCRIPTION	DATE
	REVISION	0053-006

NEXT ASSEMBLY

UNLESS OTHERWISE SPECIFIED DIMENSIONS ARE IN INCHES. TOLERANCES DECIMALS FRACTION ANGLES

MATERIAL: NOTED

HEAT TREAT: ——

FINAL PROTECTIVE FINISH: NOTED

		DATE
DRAWN BY:	CKT	6-26-00
CHECKED BY:	RAD	7-6-00
APPROVED BY:	CKT	7-17-00
APPROVED BY:	D.MARTIN	7-11-00
MFG. ACCEPT.:	D.PAUL	7-14-00

THE MONADNOCK COMPANY
CITY OF INDUSTRY, CALIFORNIA

TITLE: FLANGE, SUPPORT, 1 PIECE, 2 LUG

CODE INDENT. NO.	SIZE	DRAWING NUMBER:
60119	B	5300039-( )( )

SCALE: NONE | SALES | SHEET 1 OF 1