LISI AEROSPACE – Please refer to Central Documentation Website to check validity

13100057–()()

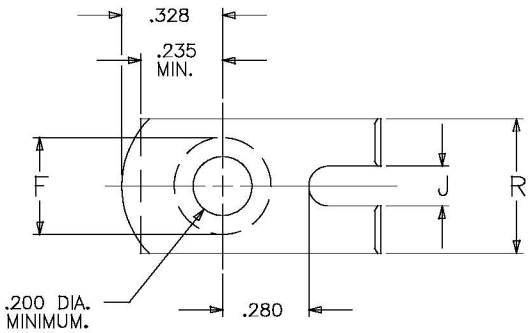

DASH NUMBER	A ± .015	B MIN.	C	SHEET THICKNESS	NOMINAL EDGE MARGIN
–1	.665	.155	.025–.055	.020–.150	.350–.650
–2	.665	.155	.025–.055	.020–.150	.350–.650
–3	.740	.235	.025–.055	.140–.230	.350–.710
–4	.665	.235	.025–.055	.140–.230	.350–.650

DASH NUMBER	R MIN.	F	INSTALLATION HOLE DIAMETER	J
–1	.427	.320	.231–.327	.125
–2	.560	.415	.327–.395	.248
–3	.427	.320	.231–.327	.125
–4	.560	.415	.327–.395	.248

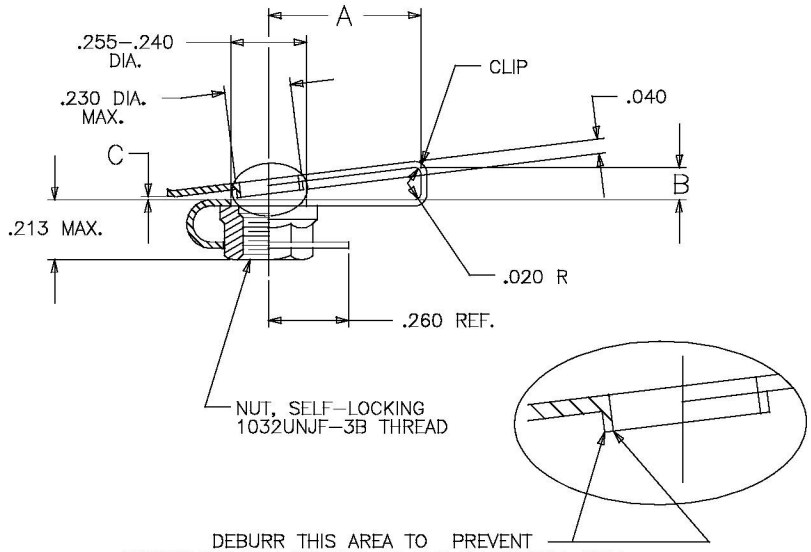

NOTES: (UNLESS OTHERWISE SPECIFIED)

1. MATERIAL:
1.1. CLIP: CARBON STEEL PER ASTM–A–684 OR AMS5085, .020 THICK.
1.2. NUT: ALLOY STEEL PER ASTM–A–752, AMS6300 OR ASTM–A–322.

2. HEAT TREAT:
2.1. CLIP: Rc 48–51.
2.2. NUT: Rc 46 MAXIMUM.

3. FINISH:
3.1. CLIP: NO SUFFIX = CADMIUM PLATE PER QQ–P–416 TYPE II, CLASS 1.
"G" SUFFIX = COAT BMS 10–11 TYPE I PER EMPS 073. THIS IS APPLIED OVER PARTS WITH TYPE II CADMIUM PLATE.

3.2. NUT: CADMIUM PLATE PER QQ–P–416 TYPE II, CLASS 2 AND DRY FILM LUBRICANT PER MIL–L–46010 TYPE I, MEETING THE REQUIREMENTS OF MIL–N–25027 AND HYDRAULIC FLUID RESISTANCE OF BMS3–8.

4. PART NUMBER EXAMPLE:
1 3 1 0 0 0 5 7 – ( ) ( )

NO SUFFIX = CADMIUM PLATE TYPE II, CLASS 1.
"G" SUFFIX = BMS 10–11 COAT TYPE I APPLIED OVER TYPE II CADMIUM PLATE.

DASH NUMBER DESIGNATES "A," AND "B," DIMENSIONS.

BASIC PART NUMBER.

ISSUE	DESCRIPTION	DATE
	REVISION 9413–016	

NEXT ASSEMBLY
END ITEM

UNLESS OTHERWISE SPECIFIED DIMENSIONS ARE IN INCHES. TOLERANCES
DECIMALS ±.010 FRACTION ANGLES ±2°

MATERIAL: NOTED

HEAT TREAT: NOTED

FINAL PROTECTIVE FINISH: NOTED

DRAWN BY: C.T. DATE 8–30–94
CHECKED BY: DATE
APPROVED BY: DATE
APPROVED BY: DATE
MFG. ACCEPT.: DATE

THE MONADNOCK COMPANY
CITY OF INDUSTRY, CALIFORNIA

TITLE: NUT ASSY.– CLIP–ON TYPE 10–32 SIZE NON–SCRATCH

CODE INDENT. NO.	SIZE	DRAWING NUMBER:
60119	B	13100057–()()

SCALE: NONE | SALES | SHEET 1 OF 1