LISI AEROSPACE – Please refer to Central Documentation Website to check validity

STANDARDS COMMITTEE FOR HI-LOK® HI-TIGUE® PRODUCTS
2600 SKYPARK DRIVE, TORRANCE, CALIFORNIA 90509

HI-SHEAR CORPORATION, U.S.A. _____ (Patent Holder) ___ U.S. Federal Code I.D. No. 73197
Division of Hi-Shear Industries Inc., U.S.A.
AIRCRAFT FASTENERS (Forged Parts) LTD., U.K. ___ (Licensee)
Division of Hi-Shear Industries Inc., U.S.A.
VOI-SHAN, Division of VSI Corp., U.S.A. _____ (Licensee) ___ U.S. Federal Code I.D. No. 92215
SPS TECHNOLOGIES, U.S.A. _____ (Licensee) ___ U.S. Federal Code I.D. No. 56878
ST. CHAMOND-GRANAT, S.A. France _____ Countries)
KAMAX-WERKE, Germany _____ Countries)
Rudolph Kellerman GmbH & Co
SIMMONDS, S.A. France _____ Countries—Collars)
TOKYO SCREW COMPANY, Japan _____ (Licensee—Japan)
WEST COAST AEROSPACE INC., U.S.A. ___ (Licensee—Oversize Pins & Steel Collars)
U.S. Federal Code I.D. No. 60516

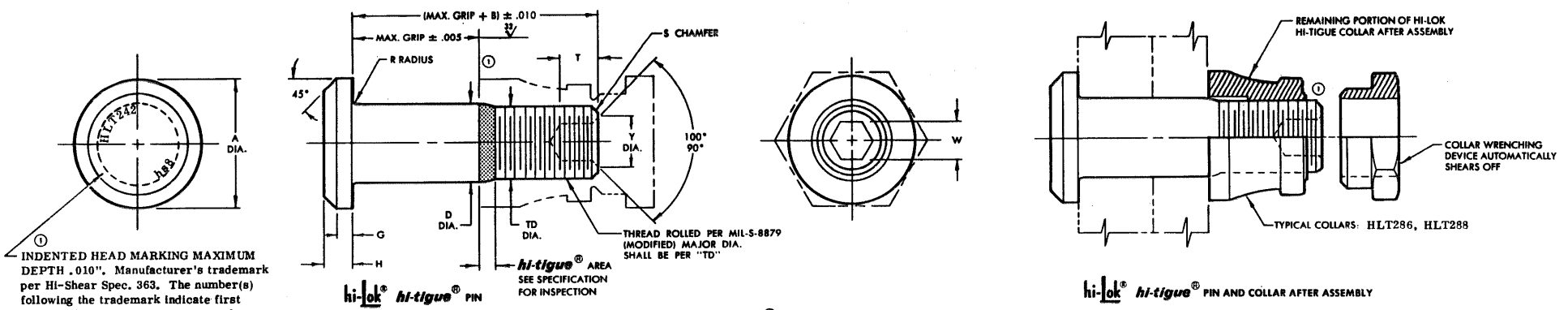

① INDENTED HEAD MARKING MAXIMUM DEPTH .010". Manufacturer's trademark per Hi-Shear Spec. 363. The number(s) following the trademark indicate first dash number. Arrangement optional.

hi-lok® hi-tigue® PIN

hi-lok® hi-tigue® PIN AND COLLAR AFTER ASSEMBLY

①

FIRST DASH NO.	NOM. DIA.	A DIA.	B REF.	D DIA. WITHOUT HI-KOTE™ LUBE	D DIA. WITH HI-KOTE™ LUBE	TD DIA.	G REF.	H		R RAD.	S CHAMFER REF.	THREAD	SOCKET W HEX.	SOCKET T DEPTH	SOCKET Y DIA.	DOUBLE SHEAR POUNDS MINIMUM	TENSION POUNDS MINIMUM
–5		NOTE: Use HLT42-6															
–6	7/32	.390 .370	.360	.2182 .2177	.2182 .2172	.1840 .1810	.035	.074 .064		.025 .015	1/32" x 45°	10-32UNJF-3A Modified	.0806 .0791	.100 .080	.119 .104	7,100	2,750
–8	9/32	.460 .435	.435	.2807 .2802	.2807 .2797	.2440 .2410	.045	.090 .080		.025 .015	1/32" x 45°	1/4-28UNJF-3A Modified	.0967 .0947	.110 .090	.142 .122	11,800	5,820
–10	11/32	.520 .490	.545	.3432 .3427	.3432 .3422	.3060 .3020	.055	.112 .102		.030 .020	3/64" x 45°	5/16-24UNJF-3A Modified	.1295 .1270	.130 .110	.180 .160	17,600	9,200
–12	13/32	.620 .585	.590	.4057 .4052	.4057 .4047	.3680 .3640	.075	.140 .130		.030 .020	3/64" x 45°	3/8-24UNJF-3A Modified	.1617 .1582	.160 .140	.217 .197	24,600	14,000
–14	15/32	.695 .660	.690	.4682 .4677	.4682 .4672	.4310 .4260	.095	.160 .150		.030 .020	3/64" x 45°	7/16-20UNJF-3A Modified	.1930 .1895	.190 .170	.253 .233	32,700	18,900
–16	17/32	.790 .755	.740	.5307 .5302	.5307 .5297	.4930 .4880	.095	.188 .178		.030 .020	3/64" x 45°	1/2-20UNJF-3A Modified	.2242 .2207	.220 .200	.289 .269	42,000	25,500
–18	19/32	.900 .865	.825	.5927 .5922	.5927 .5917	.5550 .5500	.125	.210 .200		.040 .025	1/16" x 45°	9/16-18UNJF-3A Modified	.2555 .2520	.260 .240	.326 .306	52,400	32,400

SEE COLLAR STANDARDS FOR COLLAR STRENGTHS. LOWER STRENGTH (PIN OR COLLAR) DETERMINES SYSTEM STRENGTH.

① GENERAL NOTES:
1. Concentricity: "A" to "D" diameter within .010 FIR.
2. Surface texture per ANSI B46.1.
3. Hole preparation per NAS618.

① MATERIAL: A-286 high temperature alloy per AMS5731 or AMS5737.

HEAT TREAT: 95,000 psi shear minimum at 70°F.

① FINISH: HLT242-( )-( ) = Passivate per Hi-Shear Spec. 258 and cetyl alcohol lube per Hi-Shear Spec. 305.
HLT242TB-( )-( ) = Hi-Kote 2 solid film lube and cetyl alcohol lube per Hi-Shear Spec. 305.

① SPECIFICATION: Hi-Lok Hi-Tigue Product Specification 342 and 342-2.

① CODE: First dash number indicates nominal diameter in 1/32nds of the pin which HLT242 oversize pin replaces. Second dash number indicates maximum grip in 1/16ths. See "Finish" note for explanation of code letters.

HOW TO ORDER EXAMPLES:

Pin Part Number Only
HLT242-8-8
- 8/16 or 1/2 Maximum Grip Length
- Replaces 8/32 or 1/4 Nominal Diameter Pin
- Pin Part Number

Pin and Collar Assembly Part Number Combination
HLT242286-8-8
- Size and Grip Length, See Above Example
- Collar Part Number
- Pin Part Number

U.S. Patent 3,578,367 and international patents. "HL", "Hi-Lok", "HLT", and "Hi-Tigue" are internationally registered trademarks of Hi-Shear Corporation.

DRAWN	DATE	hi-lok® hi-tigue® PIN
VAN	6-16-72	PROTRUDING TENSION HEAD
APPROVED J G Wilcox	DATE 6-20-72	A-286 HIGH TEMPERATURE ALLOY
		1/16" GRIP VARIATION – 1/32" OVERSIZE
REVISION ①	DATE D. P. S. 10-28-86	DRAWING NUMBER HLT242

HLT242

2-1597

© 1986 Hi-Shear Corporation