LISI AEROSPACE – Please refer to Central Documentation Website to check validity

STANDARDS COMMITTEE FOR HI-LOK® PRODUCTS
2600 SKYPARK DRIVE, TORRANCE, CALIFORNIA 90509

① HI-SHEAR CORPORATION, U.S.A. (Patent Holder) U.S. Federal Code I.D. No. 73197
Division of Hi-Shear Industries Inc.
VOI-SHAN, Division of VSI Corp., U.S.A. (Licensee) U.S. Federal Code I.D. No. 92215
SPS TECHNOLOGIES, U.S.A. (Licensee) U.S. Federal Code I.D. No. 56878
LITTON FASTENING SYSTEMS, U.S.A.
Division of Litton Systems, Inc. (Licensee) U.S. Federal Code I.D. No. 97928

KAMAX-WERKE, Germany (Licensee)
Rudolph Kellerman GmbH & Co.
ST. CHAMOND-GRANAT, S.A. France (Licensee)
TOKYO SCREW COMPANY, Japan (Licensee)

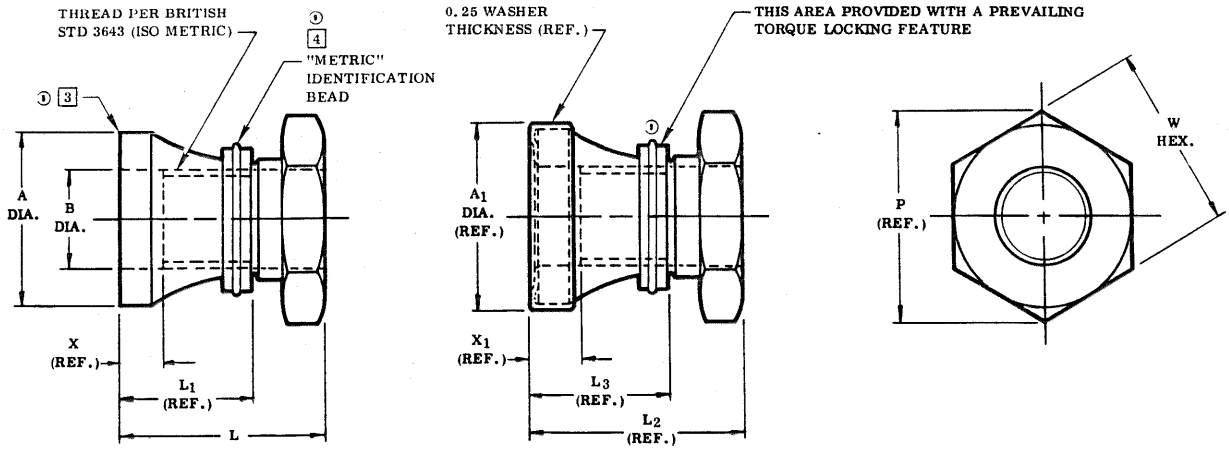

DASH NO. (METRIC)	PIN NOM. DIA.	THREAD	A DIA.	A1 DIA. (REF.) ① 4	B DIA.	L	L1 (REF.)	L2 (REF.)	L3 (REF.)	P (REF.)	W (HEX.)	X (REF.)	X1 (REF.) ① 4	TORQUE OFF NEWTON-METER	ULT TNSN STR NEWTONS MINIMUM
-04	4	M4 x 0.7-4H5H	7.42 7.15	8.1	4.25 4.15	11.75 11.25	7.2	12.0	7.7	8.87	8.00 7.78	2.8	3.3	2.8-4.0	9600
-05	5	M5 x 0.8-4H5H	8.25 7.69	8.6	5.25 5.15	11.90 11.40	7.4	12.2	7.9	11.10	10.00 9.78	2.9	3.4	3.9-5.7	12700
-06	6	M6 x 1.0-4H5H	10.47 10.30	11.2	6.25 6.15	14.50 14.00	9.2	14.8	9.7	12.12	11.00 10.73	3.3	3.8	9.0-12.5	20700
-08	8	M8 x 1.0-4H5H	13.15 13.00	14.0	① 4 8.30 8.15	17.00 16.50	11.0	17.5	11.6	14.40	13.00 12.73	3.3	3.9	20.3-26.0	36800
-10	10	M10 x 1.0-4H5H	16.50 15.78	16.9	10.30 10.15	19.75 19.25	12.9	20.2	13.6	15.56	14.00 13.73	3.3	4.0	40.6-47.5	62300
-12	12	M12 x 1.25-4H5H	21.54 19.60	22.4	12.30 12.15	23.10 22.60	15.3	23.6	16.0	18.90	17.00 16.73	3.9	4.5	67.7-76.3	97800

NOTES:
1. Go thread gage penetration shall be 3/4 of one revolution minimum after thread lock.
2. Dimensions apply after finish.
① 3. Break sharp edge.
① 4. Parts made prior to this revision are OK to use.
5. Use HLM386 for oversize replacement.

① MATERIAL: Collar — Type 303 Se stainless steel per ASTM A-582 and AMS5640.
Washer — 300 series stainless steel.

FINISH: Collar — HLM86-( ) = Solid film lube per Spec. MIL-L-8937.
HLM86PB-( ) = Cadmium plate per QQ-P-416, Type II, Class 2, and cetyl alcohol lube per Hi-Shear Spec. 305.
HLM86TB-( ) = Hi-Kote 2 solid film lube per Hi-Shear Spec. 292 and cetyl alcohol lube per Hi-Shear Spec. 305.

Collar and Washer — HLM86W-( ) = Collar finish same as HLM86-( ) and washer is passivate.
HLM86PBW-( ) = Collar finish same as HLM86PB-( ) and washer with cadmium plate per QQ-P-416, Type II, Class 2, and no lube.

SPECIFICATION: Hi-Lok Product Specification M345.

CODE: Dash number indicates nominal thread size in 1 mm.
See "Finish" note for explanation of code letters.

EXAMPLE: HLM86-08 = M8 x 1.0 Hi-Lok collar with solid film lube.
HLM86PBW-08 = M8 x 1.0 Hi-Lok collar and washer.

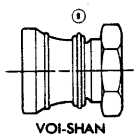

VOI-SHAN
1 raised bead indicates VOI-SHAN identification.

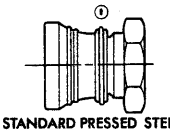

STANDARD PRESSED STEEL
2 raised beads indicate STANDARD PRESSED STEEL identification.

U.S. patents 2,927,491; 2,940,495; 3,027,789; 3,138,987.
Other U.S. and Foreign patents granted and pending.
"Hi-Lok" and "HL" are Registered Trademarks of Hi-Shear Corporation.

	DATE	BY
DRAWN	4-17-70	VAN
APPROVED	4-17-70	R. Tenjo
⑨ REVISION	5-7-80	D.P.S.

TITLE

hi-Lok® COLLAR (METRIC SERIES)

TYPE 303 Se STAINLESS STEEL
1 mm GRIP VARIATION — TENSION APPLICATION

DRAWING NUMBER

HLM86

2-1501

© 1980, Hi-Shear Corporation