LISI AEROSPACE – Please refer to Central Documentation Website to check validity

5300052

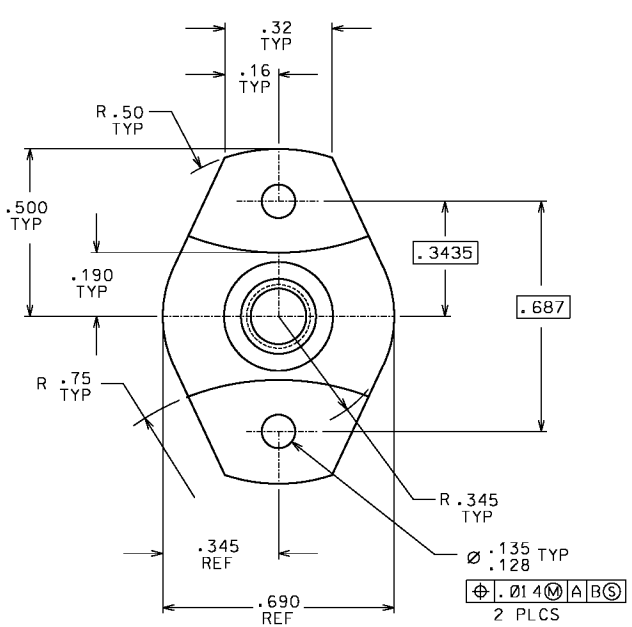

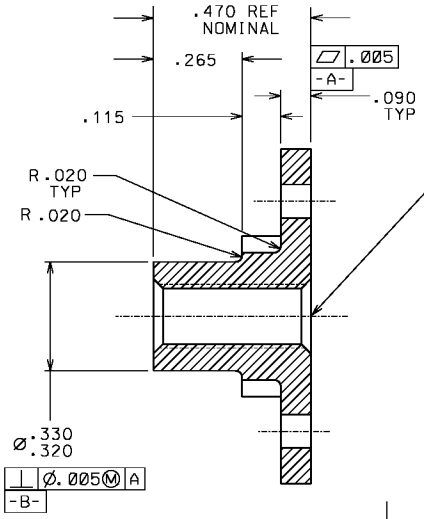

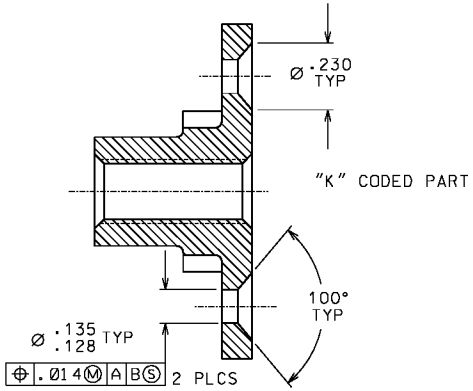

.1900-32 UNJF-3B THD
PER MIL-S-8879
⊕ Ø.014Ⓢ A BⓈ
CSK 90° X Ø.224
BOTH SIDES

NOTES:

1. MATERIAL: 321 CRES PER AMS5645, ASTM A 269 OR AMS-QQ-S-763
2. FINISH: PASSIVATED PER AMS-QQ-P-35
3. PART CALLOUT EXP:

   5 3 0 0 0 5 2 ( )
   - NO CODE = PLAIN RIVET HOLES
   - "K" CODE = C'SUNK RIVET HOLES

4. TOLERANCES:
   .XXX ±.010
   .XX ±.03
   .X ±.1
   ANGLES ± 1/2°

ISSUE	DESCRIPTION	DATE
B	SEE ECN #7876	11/12/02
A	SEE ECN #7847	10/1/02
	REVISION	0253-006

NEXT ASSEMBLY

UNLESS OTHERWISE SPECIFIED DIMENSIONS ARE IN INCHES. TOLERANCES
DECIMALS FRACTION ANGLES
NOTED

MATERIAL: NOTED

HEAT TREAT: NOTED

FINAL PROTECTIVE FINISH: NOTED

		DATE
DRAWN BY:	CKT	9-9-02
CHECKED BY:	TERRY CSIK	09-09-02
APPROVED BY:	R. DUENAS	09-09-02
APPROVED BY:	J. FLORES	09-09-02
MFG. ACCEPT.:	R. RODRIGUEZ	09-09-02

THE MONADNOCK COMPANY
CITY OF INDUSTRY, CALIFORNIA

TITLE: STANDOFF, STEPPED, FLANGED BASE, RIVETED, NON-LOCKING THREAD

CODE INDENT. NO.	SIZE	DRAWING NUMBER:
60119	B	5300052

SCALE: NONE | SALES | SHEET 1 OF 1