5300012–( )

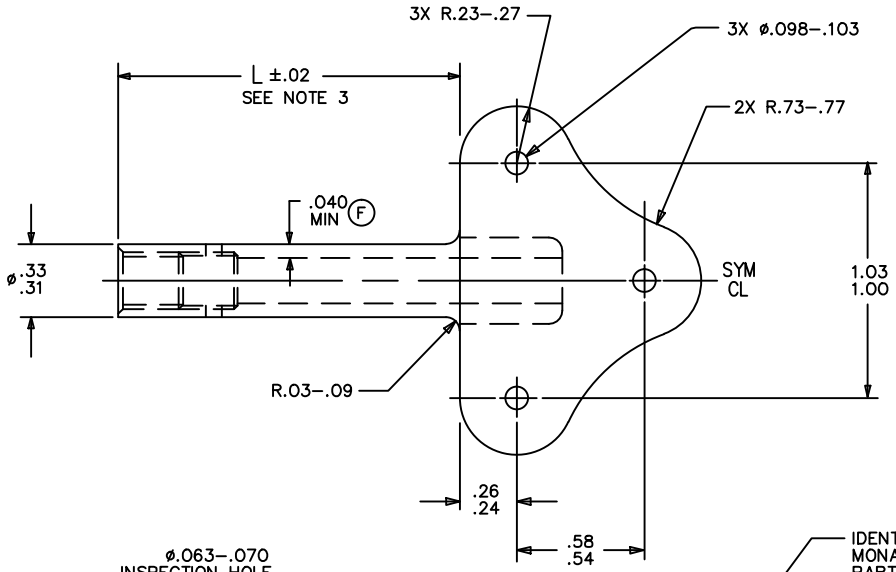

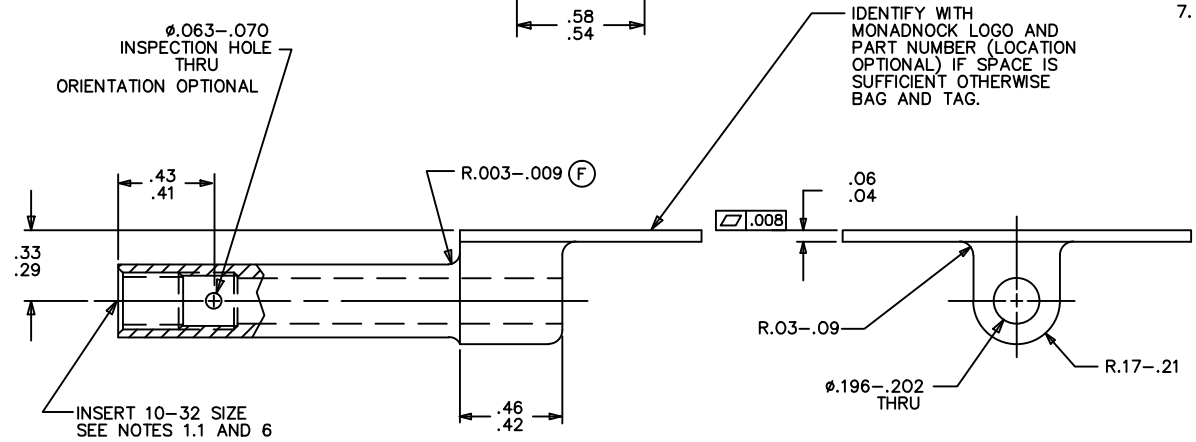

NOTES (UNLESS OTHERWISE SPECIFIED):

(F) 1. FINISH: ANODIZE PER MIL–A–8625, TYPE I, OR CHEMICAL CONVERSION COATING PER MIL–DTL–5541 CL. 1A. TO PRODUCE A COLOR INSPECTABLE FILM.

1.1 HELICAL INSERT:
NO SUFFIX = NO DRY FILM LUBE (MS21209F1–15)
SUFFIX "W" = DRY FILM LUBE (MS21209F1–15L)
SUFFIX "Y" = CAD PLATE (MS21209F1–15P)

2. NO BURRS AND BREAK ALL SHARP EDGES.

3. L = LENGTH IN .100 INCREMENTS
–1 = .100, –30 = 3.000. MIN LENGTH = –0
AVAILABLE IN .050 INCREMENTS (–1.5 = .150)

(F) 4. –4 AND BELOW HAS NO INSPECION HOLE, MUST HAVE "NH" SUFFIX.

5. NO SUFFIX = .103/.098 RIVET HOLES NO LUBE ON INSERT.
SUFFIX "A" = .135/.128 DIA RIVET HOLES
SUFFIX "NH" = NO INSPECTION HOLE
SUFFIX "B" = DEBURRED INSPECTION HOLE

6. MS21209 HELICAL INSERT INSTALLED PER NASM33537

7. PART CALLOUT:
5300012–( )( )( )( )( )
- NO CODE = INSPECTION HOLE; "NH" CODE = NO INSPECTION HOLE
- NO CODE = STANDARD INSERT FINISH; "W" CODE = DRY FILM LUBED INSERT; "Y" CODE = CADMIUM PLATED INSERT
- NO CODE = INSPECTION HOLE NOT DEBURRED; "B" CODE = INSPECTION HOLE DEBURRED
- NO CODE = .098–.103 DIA RIVET HOLES; "A" CODE = .128–.135 DIA RIVET HOLES
- LENGTH CODE

FAA–TSO AUTHORIZED PART

REV.	ECN NO.	INIT.	DATE
F	12188	JC	4/1/20
E	11085	JT	5/24/16

REPRODUCTION OF THIS DRAWING OR MANUFACTURE OF THE PROPRIETARY PARTS SHOWN HERE WITHOUT WRITTEN PERMISSION OF LISI AEROSPACE THE MONADNOCK COMPANY IS PROHIBITED

NEXT ASSEMBLY: END ITEM

THIRD ANGLE PROJECTION

UNLESS OTHERWISE SPECIFIED DIMENSIONS ARE IN INCHES. TOLERANCES ARE AS FOLLOWS:
DECIMALS – FRACTION – ANGLES –

MATERIAL: 2014–T6 ALUMINUM ALLOY PER AMS–QQ–A–367 OR ASTM B247 (F)

HEAT TREAT: N/A

FINAL PROTECTIVE FINISH: SEE NOTE 1

IBM NUMBER: N/A

PROJECT NUMBER: 9853–001

DRAWN BY: CKT DATE: 6/15/98

APPROVED BY: RAD DATE: 2/2/99

lisi AEROSPACE THE MONADNOCK COMPANY
16728 E. GALE AVE.
CITY OF INDUSTRY, CALIFORNIA

TITLE: SPACER, NUT PLATE, 3 LUG, LIGHT DUTY, SELF–LOCKING, 10–32 SIZE

CAGE CODE: 60119 | SIZE: A | DRAWING NUMBER: 5300012–( )

SCALE: NONE | SALES | SHEET 1 OF 1

FORME050A rev.G