188006()()–()

TABLE I

FIRST DASH NO		T THREAD SIZE PER AS8879	B MAX	øD MIN	F MIN	H MAX	L MIN SPCG	M MIN	øP		V MAX	AXIAL STRENGTH LBS MIN	WEIGHT	
NO DFL	DFL								MAX	MIN			NUT LBS/100	CHANNEL LBS/INCH
–08	L08	.1640–32UNJF–3B	.416	.168	.343	.250	.625	.062	.270	.184	.035	1,720	.19	.0071
–3	L3	.1900–32UNJF–3B	.416	.194	.343	.250	.625	.062	.270	.210	.035	2,460	.20	.0071
–4	L4	.2500–28UNJC–3B	.516	.254	.406	.281	.750	.062	.330	.270	.045	4,580	.43	.0084
–5	L5	.3125–24UNJC–3B	.609	.317	.469	.328	.875	.062	.393	.333	.045	7,390	.64	.0146
–6	L6	.3750–24UNJF–3B	.726	.379	.562	.344	1.000	.062	.455	.395	.055	11,450	1.08	.0186

TABLE II

SECOND DASH NO	L NUT ELEMENT SPACING	MAXIMUM NUMBER OF NUT ELEMENTS
–5	.625	115
–6	.750	96
–7	.875	82
–8	1.000	72
–9	1.125	64
–10	1.250	57
–11	1.375	52
–12	1.500	48
–13	1.625	44
–14	1.750	41
–15	1.875	38
–16	2.000	36
–18	2.250	32
–20	2.500	28
–24	3.000	24

EXAMPLE PART NUMBER: 1 8 8 0 0 6 ( ) ( ) – ( )

- BASIC PART NUMBER
- FIRST DASH NO. FOR THREAD SIZE PER TABLE I
- SECOND DASH NO FOR NUT ELEMENT SPACING PER TABLE II
- NUMBER OF NUT ELEMENTS WHEN LESS THAN STOCK LENGTH IS DESIRED

11 'H' MAX APPLIES TO NUT ELEMENTS AND CHANNEL.

12 HOLE IN CHANNEL MUST PROVIDE FOR FULL FLOAT OF NUT ELEMENT BUT NEED NOT BE CIRCULAR

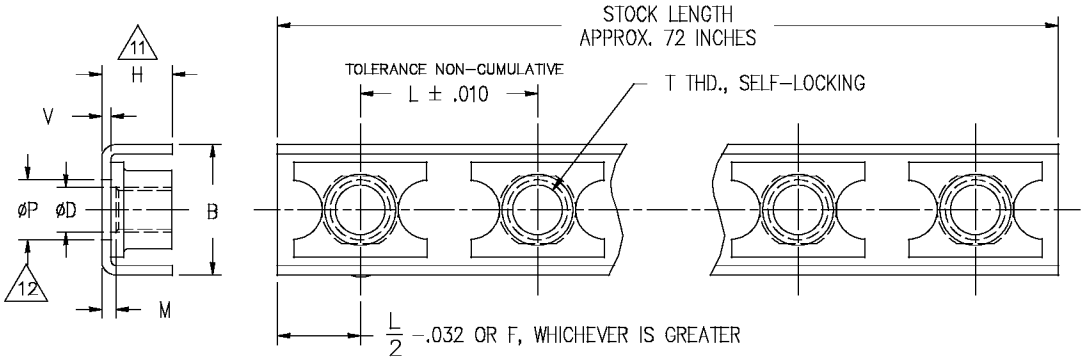

NOTES (UNLESS OTHERWISE SPECIFIED) :

1. MATERIAL:
1.1 CHANNEL: A286 (UNS S66286) CRES PER AMS5525, AMS5732, OR AMS5737. OR 321 CRES (UNS S32100) PER AMS5510.
1.2 NUT: CARBON STEEL 1035 (UNS G10350), 1040 (UNS G10400), AND 1050 (UNS G10500) PER ASTM–A–827; 1042 (UNS G10420) PER ASTM–A–29. ALLOY STEEL 4130 (UNS G41300), 4340 (UNS G43400) AND 8740 (UNS G87400) PER ASTM–A–29.

2. FINISH:
2.1 CHANNEL: PASSIVATE PER AMS2700.

2.2 NUT: CADMIUM PLATED PER AMS–QQ–P–416, TYPE II, CLASS 2. FOR DRY FILM LUBRICATED NUTS THE TYPE AND CLASS ARE OPTIONAL IF THE NUTS MEET THE SALT SPRAY REQUIREMENTS OF AMS–QQ–P–416, TYPE II.

3. HEAT TREAT: NUT ELEMENT HARDNESS TO BE 49 HRC MAX.

4. LUBRICATION: DRY FILM LUBRICANT APPROVED IN ACCORDANCE WITH NASM25027. NON–DRY FILM LUBRICANTS SHALL BE SOLUBLE IN THE CLEANER SPECIFIED IN MIL–S–8802.

5. LENGTH: TO BE STOCKED IN 72 INCHES ONLY.

6. THE ASSEMBLY SHALL PROVIDE A BEARING SURFACE FOR THE NUT ELEMENT WITHIN THE HOUSING. THE CHANNEL CENTERLINE SHALL NOT DEVIATE FROM A STRAIGHT LINE BY MORE THAT 0.015" IN ANY 12 INCHES. THE NUT ELEMENT AND BASE PORTION OF THE ASSEMBLY SHALL FORM ONE INTEGRAL UNIT.

7. FLOAT OF THE NUT ELEMENT PORTION OF THE ASSEMBLY SHALL NOT BE LESS THAN .030 NOR MORE THAN .040 LONGITUDINALLY AND NOT LESS THAN .010 NOR MORE THAN .030 LATERALLY FROM THE CENTERED POSITION. NUT ELEMENT SHALL BE CAPABLE OF ENGAGEMENT WITH A BOLT IN THE MAXIMUM MISALIGNMENT POSITION. MAXIMUM AXIAL FLOAT .020 INCH FOR –08 AND –3, .030 FOR LARGER SIZES.

8. PROCUREMENT SPECIFICATION: NASM25027.

9. REMOVE ALL BURRS AND BREAK SHARP CORNERS.

10. THREADS PER AS8879 BEFORE DRY FILM LUBRICATION AND CRIMP.

CONFIGURATION OF NUT AND CHANNEL OPTIONAL WITHIN THE LIMITATIONS IMPOSED BY DIMENSIONS AND REQUIREMENTS AS SPECIFIED HEREIN

THIRD ANGLE PROJECTION

ISSUE	ECN NUMBER	DATE
–	–	–
–	–	–

PROJECT No. 0718–010

REPRODUCTION OF THIS DRAWING OR MANUFACTURE OF THE PROPRIETARY PARTS SHOWN HERE WITHOUT WRITTEN PERMISSION OF LISI AEROSPACE MONADNOCK IS PROHIBITED

ITEM NO.	QTY. REQ'D	PART NO.	DESCRIPTION	MATERIAL OR NOTES

NEXT ASSEMBLY: END ITEM

PREVIOUS ASSEMBLY: –

UNLESS OTHERWISE SPECIFIED DIMENSIONS ARE IN INCHES. TOLERANCES DECIMALS FRACTION ANGLES: NOTED

MATERIAL: NOTED

HEAT TREAT: N/A

FINAL PROTECTIVE FINISH: NOTED

IBM #

		DATE
DRAWN BY:	TSC	05/07/07
ENG. APPROVAL:	TSC	05/07/07
QUAL. ACCEPT.:	BG	05/07/07
MFG. ACCEPT.:	JA	05/07/07

lisi AEROSPACE THE MONADNOCK COMPANY
18301 E. ARENTH AVE
CITY OF INDUSTRY, CALIFORNIA

TITLE: GANG CHANNEL, LOW HEIGHT, CRES, SELF–LOCKING, STEEL NUT, 125 KSI Ftu, 450°F (MS21064)

CODE IDENT. NO.: 60119 | SIZE: B | DRAWING NUMBER: 188006()()–()

SCALE: NONE | SALES | SHEET 1 OF 1

FORME050 Rev C