LISI AEROSPACE – Please refer to Central Documentation Website to check validity

13080000K-()()-()

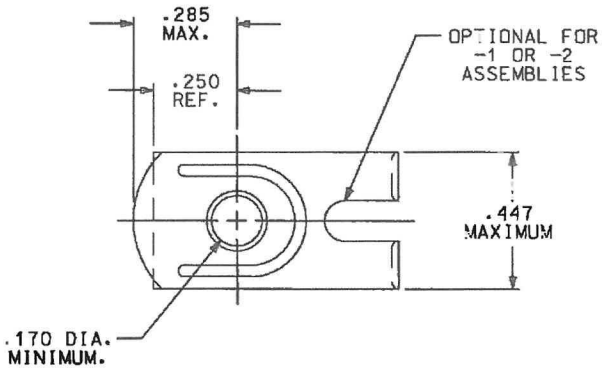

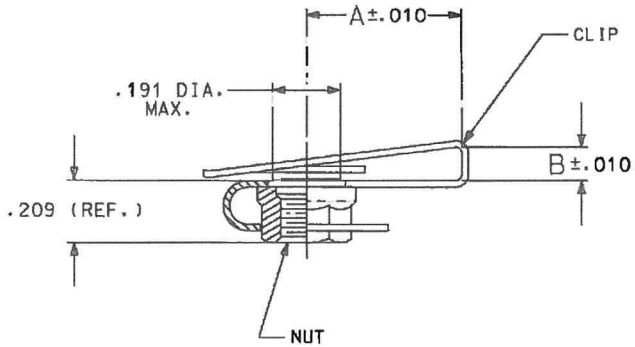

DASH NUMBER	A ±.010	B ±.010	NOMINAL EDGE DISTANCE	MOUNTING SHEET THICKNESS	RECOMMENDED INSTALLATION HOLE DIA.
-1	.265	.180	.250	.020-.120	.192-.202
-2	.300	.130	.281	.020-.120	.192-.202
-3	.395	.163	.375	.020-.120	.192-.202
-4	.520	.190	.500	.020-.120	.192-.202
-5	.665	.190	.625	.020-.120	.192-.202

NOTES: (UNLESS OTHERWISE SPECIFIED)

1. MATERIAL:
1.1. CLIP: STEEL, AUSTEMPERED TO Rc 48 MIN.
1.2. NUT: ALLOY STEEL Rc 35 MIN.

2. FINISH:
2.1. CLIP: CADMIUM PLATE PER QQ-P-416 TYPE II, CLASS 2.
"G" CODE : CADMIUM PLATE PER QQ-P-416, TYPE III, CLASS 2 AND COAT BMS10-11 PER EMPS073.

2.2. NUT: CADMIUM PLATE PER QQ-P-416 TYPE II, CLASS 2. MOLYBDENUM DISULFIDE DRY FILM LUBRICANT.

3. FLOAT: APPROX .011 RADIAL WHEN USED WITH RECOMMENDED INSTALLATION HOLE.

4. PART NUMBER EXAMPLE:
13080000K-()()-()
- "O" OPTION FOR LOCKING NUT LESS DRY FILM LUBE
- "NO CODE": CADMIUM PLATE ONLY
- "G" CODE : OPTIONAL FINISH
- DASH NO.
- BASIC PART NO.

5. DIMENSIONS APPLY BEFORE BMS10-11 COATING.

FAA-TSO AUTHORIZED PART

ISSUE	DESCRIPTION	DATE
REVISION		

NEXT ASSEMBLY

UNLESS OTHERWISE SPECIFIED DIMENSIONS ARE IN INCHES. TOLERANCES DECIMALS ±.010 FRACTION ANGLES

MATERIAL: NOTED

HEAT TREAT: NOTED

FINAL PROTECTIVE FINISH: NOTED

DRAWN BY: MARK DATE 7-8-94
CHECKED BY: DATE
APPROVED BY: DATE
APPROVED BY: DATE
MFG. ACCEPT.: DATE

THE MONADNOCK COMPANY
CITY OF INDUSTRY, CALIFORNIA

TITLE: CLIP NUT ASSEMBLY, SIZE 8-32, SELF LOCKING, KIT PROGRAM

CODE INDENT. NO.	SIZE	DRAWING NUMBER:
60119	B	13080000K-()()-()

SCALE: NONE | SALES | SHEET 1 OF 1

Engineering Support Zero Release 15-Jun-2007

LISI AEROSPACE – Please refer to Central Documentation Website to check validity