LISI AEROSPACE – Please refer to Central Documentation Website to check validity

lisi AEROSPACE CANADA
LINK SOLUTIONS FOR INDUSTRY

REVISIONS			
LTR	DESCRIPTION	DATE	APPROVED

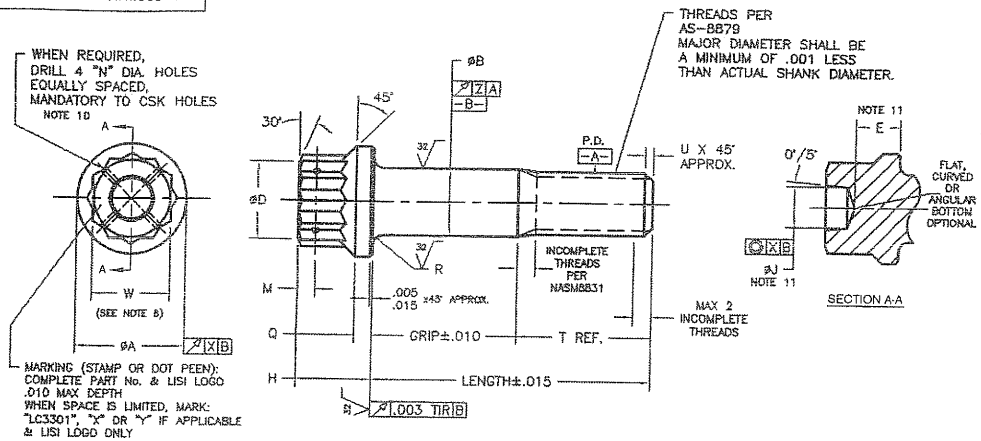

TABLE 1

FIRST DASH NO	THREAD SIZE: UNJF-3A	Ø A ±.005	Ø B STANDARD (NO CODE)	Ø B (.0156 o/s) CODE "X"	Ø B (.0313 o/s) CODE "Y"	Ø D MIN MAX	E MIN	H ±.010	Ø J +.010 -.030	M ±.010	N DIA. ±.005
03	.1900–32	.364	.1885 .1895	.2041 .2051	.2198 .2208	.235 .250	.098	.254	.156	.062	.055
04	.2500–28	.470	.2485 .2495	.2641 .2651	.2798 .2808	.297 .312	.135	.319	.180		
05	.3125–24	.580	.3110 .3112	.3266 .3276	.3423 .3433	.360 .375	.162	.388	.215	.070	.070
06	.3750–24	.720	.3735 .3745	.3891 .3901	.4048 .4058	.485 .500	.197	.435	.297		
07	.4375–20	.825	.4360 .4370	.4516 .4526	.4673 .4683	.547 .562	.228	.504	.320		
08	.5000–20	.945	.4985 .4995	.5141 .5151	.5298 .5308	.610 .625	.254	.557	.380	.094	
09	.5625–18	1.050	.5605 .5615	.5761 .5771	.5918 .5928	.735 .750	.287	.618	.440		
10	.6250–18	1.190	.6230 .6240	.6386 .6396	.6543 .6553	.797 .812	.327	.711	.469		
12	.7500–16	1.225	.7480 .7490	.7636 .7646	.7793 .7803	.922 .937	.380	.808	.570		
14	.8750–14	1.433	.8730 .8740	.8886 .8896	.9043 .9053	1.110 1.125	.438	.923	.750	.125	
16	1.0000–12	1.620	.9980 .9990	1.0136 1.0146	1.0293 1.0303	1.235 1.250	.493	1.051	.843		
18	1.1250–12	1.870	1.1225 1.1240	1.1381 1.1396	1.1538 1.1553	1.297 1.312	.556	1.155	.953		
20	1.2500–12	2.120	1.2475 1.2490	1.2631 1.2646	1.2788 1.2803	1.422 1.437	N/A	1.266	N/A		
22	1.3750–12	2.308	1.3725 1.3740	1.3881 1.3896	1.4038 1.4053	1.610 1.625	N/A	1.434	N/A		
24	1.5000–12	2.585	1.4975 1.4990	1.5131 1.5146	1.5288 1.5303	1.735 1.750	N/A	1.596	N/A	.175	

Lisi Aerospace Canada TRADE SECRET: INFORMATION ON THIS DOCUMENT IS PROPRIETARY. ANY UNAUTHORIZED USE OR REPRODUCTION IN WHOLE OR IN PART IS PROHIBITED EXCEPT AS AUTHORIZED IN WRITING BY LISI AEROSPACE CANADA.

CUSTOMER APPROVAL:
NAME / SIGNATURE:
TITLE: DATE:

DRAWN BY: M.J.
VERIFIED BY: R.G.
APPROVED BY: V.P.
SCALE: NONE DATE: 02/23/2007
DIMENSIONING AND TOLERANCING IN ACCORDANCE WITH ANSI Y14.5M

REF. P/N: NAS1785 MOD.
UNLESS OTHERWISE SPECIFIED:
DIMENSIONS: INCH [mm]
SURFACE ROUGHNESS: 125 MICRONS [1.6]
TOLERANCE: .XX = ±.010
.XXX = ±.005
ANGLES: ± 2°
BREAK ALL SHARP EDGES: .005/.015

DRAWING TITLE: BOLT, 12-POINT HEAD, AMS 5842 ALLOY (159), 260 KSI MIN. TENSILE STRENGTH (STANDARD & OVERSIZE SHANK)

DRAWING NUMBER: LC3301
REV. -

SHEET 1 OF 2

lisi AEROSPACE CANADA
LINK SOLUTIONS FOR INDUSTRY

REVISIONS			
LTR	DESCRIPTION	DATE	APPRO

TABLE 1 (CONTINUED)

FIRST DASH NO	Q ±.010	R MIN MAX	U REF.	T REF.	W NOM. SIZE	COCENTRICITY X	COCENTRICITY Z	ULT. TENSILE (Lb MIN)	FATIGUE* HI LOAD (Lb)
03	.075	.031 .041	.040	.419	.2500	.005	.0045	5650	2930
04	.094			.531	.3125			10100	5240
05	.114		.050	.611	.3750	.006		16000	8300
06	.128	.047 .057		.707	.5000	.008		24700	12800
07	.148		.060	.814	.5625	.009	.0060	33500	17400
08	.164			.926	.6250	.010		44600	23200
09	.181	.063 .073	.070	1.025	.7500	.011		56600	29400
10	.209			1.152	.8125	.012		70800	36800
12	.237		.080	1.314	.9375	.015		102800	53400
14	.271	.077 .089	.090	1.542	1.1250	.018	.0090	140200	72800
16	.309		.100	1.812	1.2500	.020		182700	94900
18	.339			1.986	1.3125	.022		234200	121600
20	.368			2.166	1.4375	.025		292000	151700
22	.428			2.327	1.6250	.028	.0120	356300	185000
24	.461			2.506	1.7500	.030		426900	221700

*FATIGUE LOW LOAD = 10% OF HI LOAD

NOTES:

1) MATERIAL: AMS 5842
2) PROCUREMENT SPECIFICATION: AS 7475 EXCEPT AS NOTED HEREIN.
3) HEAT TREATMENT : 260 KSI MINIMUM U.T.S.
4) FLUORESCENT PENETRANT INSPECTION 100% PER ASTM-E-1417 TYJ SL2
5) MECHANICAL TESTING PER AS 7475-1 REQUIREMENTS:
   -FATIGUE TESTING REQUIRED PER AS 7475
   -TENSILE AND FATIGUE TESTS NOT APPLICABLE FOR PARTS WITH GRIP LENGTH LESS THAN 2 DIAMETERS
   -DOUBLE SHEAR TEST NOT APPLICABLE FOR PARTS WITH GRIP LENGTH LESS THAN 2 ½ DIAMETERS
   -DOUBLE SHEAR LOADS FOR OVERSIZE "X" & "Y" CODE PARTS ARE BASED ON 132 KSI & NOMINAL DIA.
6) WRENCHING ELEMENT (W) SHALL BE IN ACCORDANCE WITH AS 870
7) DIMENSIONS IDENTIFIED WITH "REF" ARE FOR INFORMATION PURPOSES ONLY, NOT AN INSPECTION REQUIREMENT.
8) SURFACE TREATMENT: CLEANING PER AS7475 OR CADMIUM PLATE IN ACCORDANCE WITH AMS-QQ-P-416, TYPE II, CLASS 2.
9) DIMENSIONS APPLY AFTER PLATING, WHEN APPLICABLE.
10) ADD LETTER H AFTER SECOND DASH NO. TO DESIGNATE DRILLED HEAD.
11) LIGHTENING FEATURE IN HEAD (DIA "J" AND DIM "E") IS OPTIONAL FOR UNDRILLED HEAD (NO LOCKWIRE HOLES) .
12) FIRST DASH NUMBERS DESIGNATE DIAMETER IN SIXTEENTHS, SECOND DASH NUMBERS DESIGNATE GRIP LENGTH IN SIXTEENTHS, TOTAL LENGTH EQUALS GRIP PLUS "T".
13) USE WHOLE DASH NUMBERS ONLY
14) ADD "X" OR "Y" AFTER FIRST DASH NUMBER TO DESIGNATE APPLICABLE OVERSIZE SHANK
15) ADD "C" AFTER BASIC PART NUMBER TO DESIGNATE CADIUM PLATING
16) PART NUMBER EXAMPLE : LC3301 - 8 - 12H = .5000-20 BOLT, DRILLED HEAD, .750 GRIP LENGTH, X SIZE DIA. B.

- DRILLED CONFIGURATION (NO CODE = UNDRILLED, H = DRILLED HEAD)
- SECOND DASH NUMBER: GRIP LENGTH IN 1/16"
- OVERSIZE CODE (- = STANDARD, X = .0156 OVERSIZE, Y = .0312 OVERSIZE)
- FIRST DASH NUMBER: BASIC DIAMETER IN 1/16"
- SURFACE FINISH (- = CLEANING , C = CADMIUM PLATING)
- BASIC PART NUMBER

Lisi Aerospace Canada TRADE SECRET: INFORMATION ON THIS DOCUMENT IS PROPRIETARY. ANY UNAUTHORIZED USE OR REPRODUCTION IN WHOLE OR IN PART IS PROHIBITED EXCEPT AS AUTHORIZED IN WRITING BY LISI AEROSPACE CANADA.

CUSTOMER APPROVAL:
NAME / SIGNATURE:
TITLE: DATE:

DRAWN BY: M.J.
VERIFIED BY: R.G.
APPROVED BY: V.P.
SCALE: NONE DATE: 02/23/2007
DIMENSIONING AND TOLERANCING IN ACCORDANCE WITH ANSI Y14.5M

REF. P/N: NAS1785 MOD.
UNLESS OTHERWISE SPECIFIED:
DIMENSIONS: INCH [mm]
SURFACE ROUGHNESS: 125 MICRONS [1.6]
TOLERANCE: .XX = ±.010
.XXX = ±.005
ANGLES: ± 2°
BREAK ALL SHARP EDGES: .005/.015

DRAWING TITLE: BOLT, 12-POINT HEAD, AMS 5842 ALLOY (159), 260 KSI MIN. TENSILE STRENGTH (STANDARD & OVERSIZE SHANK)

DRAWING NUMBER: LC3301
REV -

SHEET 2 OF 2

LISI AEROSPACE – Please refer to Central Documentation Website to check validity