lisi AEROSPACE
hi-shear corporation
2600 SKYPARK DRIVE, TORRANCE, CALIFORNIA 90509 U.S.A.

⑥

HI-SHEAR Corporation, USA
a LISI AEROSPACE Company

Design Holder

CAGE No. 73197

For the current list of licensed manufacturers, please visit the LISI AEROSPACE website at:
HTTP://WWW.LISI-AEROSPACE.COM/LICENSES

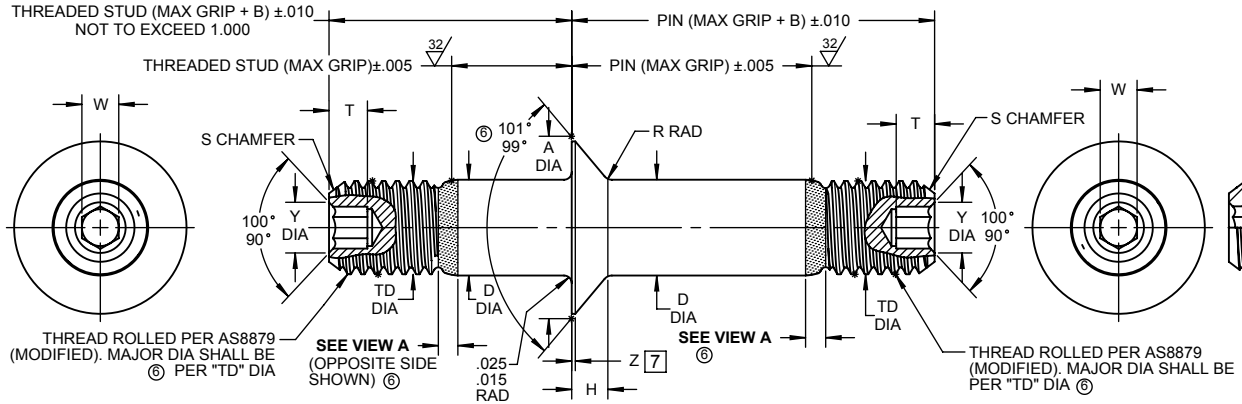

HI-LITE™ THREADED STUD PIN

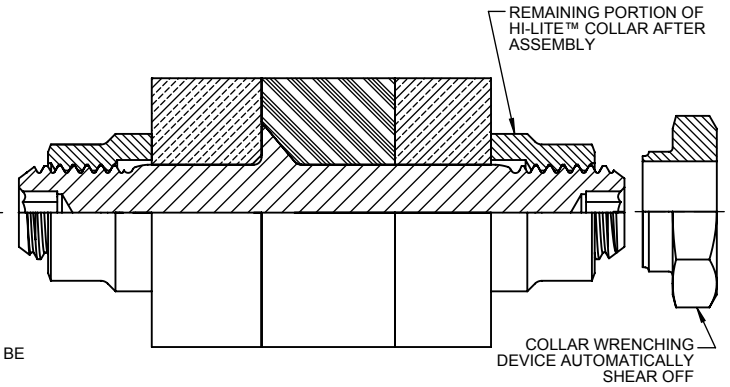

HI-LITE™ THREADED PIN AND COLLAR AFTER ASSEMBLY

8 1 7

FIRST DASH NO.	PIN NOM DIA	A DIA	B REF	D DIA WITHOUT COATING OR SOLID FILM	D DIA WITH COATING OR SOLID FILM	TD DIA	F	H	R RAD	Z MAX	S CHAMFER REF	THREAD MODIFIED	SOCKET W HEX	SOCKET T DEPTH	SOCKET Y DIA	DOUBLE SHEAR POUNDS MINIMUM	TENSION POUNDS MINIMUM
6	3/16	.3536 .3486	.290	.1895 .1890	.1895 .1885	.1840 .1810	.005	.069 .067	.030 .020	.015	1/32 x 45°	.1900-32 UNJF-3A	.0806 .0791	.100 .080	.119 .104	5,380	2,590
8	1/4	.4732 .4682	.320	.2495 .2490	.2495 .2485	.2440 .2410	.006	.094 .092	.030 .020	.015	1/32 x 45°	.2500-28 UNJF-3A	.0967 .0947	.110 .090	.142 .122	9,300	4,760
10	5/16	.5619 .5569	.380	.3120 .3115	.3120 .3110	.3060 .3020	.007	.105 .103	.040 .030	.015	3/64 x 45°	.3125-24 UNJF-3A	.1295 .1270	.130 .110	.180 .160	14,600	7,100
12	3/8	.6912 .6862	.420	.3745 .3740	.3745 .3735	.3680 .3640	.008	.133 .131	.040 .030	.015	3/64 x 45°	.3750-24 UNJF-3A	.1617 .1582	.160 .140	.217 .197	21,000	10,600

SEE COLLAR STANDARDS FOR COLLAR STRENGTHS. LOWER STRENGTH (PIN OR COLLAR) DETERMINES SYSTEM STRENGTH.

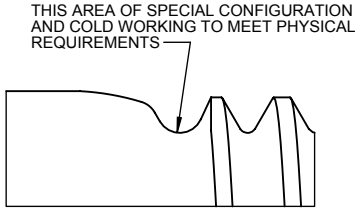

VIEW A
HI-LITE™ THREAD TRANSITION AREA
SEE SPECIFICATION FOR INSPECTION

GENERAL NOTES:
1. Head edge out of roundness shall not exceed "F".
2. Concentricity: Conical surface of head to "D" diameter within .005 FIM. Threaded stud side to pin side within .010 FIM.
3. "H" is dimensioned from maximum "D" diameter.
⑥ 4. Dimensions are in inches and to be met after finish.
⑥ 5. Surface texture per ASME B46.1.
6. Hole preparation per NAS618.
7. Curved or flat edge manufacturer's option.
8. After February, 21st of 2015, HI-KOTE™ 1 aluminum pigmented coating per Hi-Shear Spec. 294 will be replaced by REACH compliant HI-KOTE™ 1 NC aluminum pigmented coating per Hi-Shear Spec. 294 on fasteners coated in European Union.

CODE: First dash number indicates nominal diameter in 1/32nds. Second dash number indicates pin maximum grip in 1/16ths. Third dash number indicates threaded stud maximum grip in 1/16 ths. See Finish note for explanation of code letters.

HOW TO ORDER
⑥ **EXAMPLE:** Stud Pin Part Number
HST145AG8-8-8
- 8/16 or 1/2 Threaded Stud Maximum Grip Length
- 8/16 or 1/2 Pin Maximum Grip Length
- 8/32 or 1/4 Nominal Diameter Pin
- Finish Code
- Pin Basic Part Number

MATERIAL: 6Al-4V titanium alloy per AMS4928 or AMS4967.

HEAT TREAT: 95,000 psi shear minimum.

FINISH:
HST145-( )-( )-( ) = Cetyl alcohol lube per Hi-Shear Spec. 305.
8 HST145AG( )-( )-( ) = HI-KOTE™ 1 aluminum pigmented coating per Hi-Shear Spec. 294, color orange on both ends, and cetyl alcohol lube per Hi-Shear Spec. 305 and cetyl alcohol lube per Hi-Shear Spec. 305.
8 HST145AP( )-( )-( ) = HI-KOTE™ 1 aluminum pigmented coating per Hi-Shear Spec. 294 and cetyl alcohol lube per Hi-Shear Spec. 305.
HST145BJ( )-( )-( ) = I.V.D. aluminum coating per MIL-DTL-83488, Type II, Class 3, and cetyl alcohol lube per Hi-Shear Spec. 305. per Hi-Shear Spec. 305.
HST145DL( )-( )-( ) = KALGARD FA or EM620C solid film lube per AS5272, Type I and cetyl alcohol lube per Hi-Shear Spec. 305.

SPECIFICATION: HI-LITE™ Product Specification 380.

"HI-LITE", "HST", AND "HI-KOTE", ARE TRADEMARKS OF HI-SHEAR CORPORATION

DRAWN BY	DATE	TITLE
D.P.D.	1989-07-20	HI-LITE™ THREADED STUD PIN 100° FLUSH MS20426 SHEAR HEAD TITANIUM 1/16 GRIP VARIATION
APPROVED D.W.	DATE 1989-07-20	
REVISION 6	DATE F.CARINGELLA 2018-01-09	DRAWING NUMBER **HST145** 1 OF 1

HST145

©2018 Hi-Shear Corporation