LISI AEROSPACE – Please refer to Central Documentation Website to check validity

hi-shear CORPORATION
2600 SKYPARK DRIVE
TORRANCE, CALIFORNIA 90509
AREA CODE 213 · 775-3181 · 326-8110

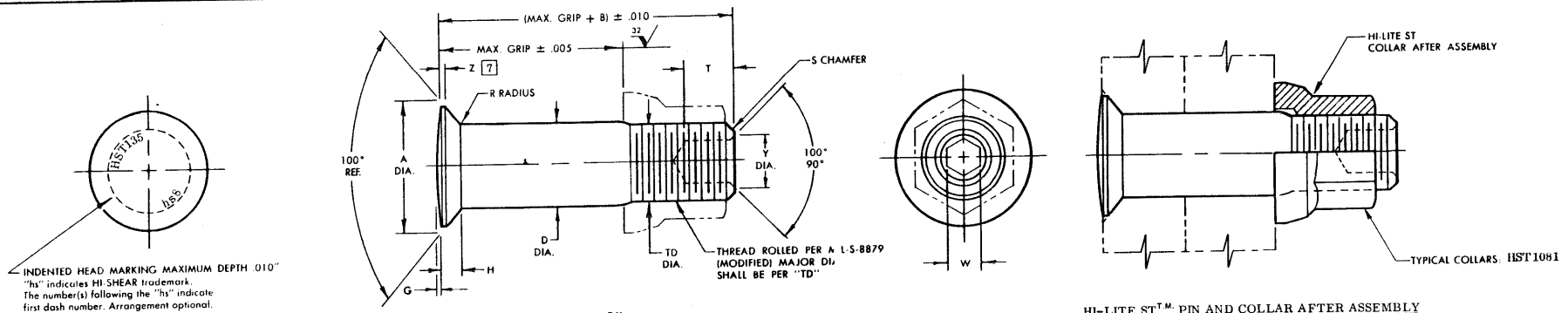

HI-LITE ST™ PIN

HI-LITE ST™ PIN AND COLLAR AFTER ASSEMBLY

FIRST DASH NO.	NOM. DIA.	A DIA.	B REF.	D DIA.	TD DIA.	F	G	H	R RAD.	Z MAX. [7]	S CHAMFER REF.	THREAD	SOCKET W HEX.	SOCKET T DEPTH	SOCKET Y DIA.	DOUBLE SHEAR POUNDS MINIMUM	TENSION POUNDS MINIMUM
-4	1/8	.2219 .2171	.260	.1375 .1365	.1335 .1310	.003	.006 .002	.0354 .0334	.020 .010	.010	1/32" x 45°	6-32UNJC-3A Modified	.0645 .0635	.090 .070	.090 .075	3,230	1,290
-5	5/32	.2612 .2564	.280	.1635 .1625	.1595 .1570	.004	.006 .002	.0410 .0390	.025 .015	.010	1/32" x 45°	8-32UNJC-3A Modified	.0801 .0791	.100 .080	.109 .094	4,560	1,750
-6	3/16	.3016 .2966	.290	.1895 .1885	.1840 .1810	.005	.006 .002	.0470 .0449	.030 .020	.015	1/32" x 45°	10-32UNJF-3A Modified	.0806 .0791	.100 .080	.119 .104	6,100	2,340
-8	1/4	.3948 .3898	.320	.2495 .2485	.2440 .2410	.006	.006 .002	.0610 .0589	.030 .020	.015	1/32" x 45°	1/4-28UNJF-3A Modified	.0967 .0947	.110 .090	.142 .122	10,600	4,200
-10	5/16	.4739 .4689	.380	.3120 .3110	.3060 .3020	.007	.006 .002	.0679 .0658	.040 .030	.015	3/64" x 45°	5/16-24UNJF-3A Modified	.1295 .1270	.130 .110	.180 .160	16,600	6,500
-12	3/8	.5604 .5554	.420	.3745 .3735	.3680 .3640	.008	.006 .002	.0780 .0759	.040 .030	.015	3/64" x 45°	3/8-24UNJF-3A Modified	.1617 .1582	.160 .140	.217 .197	23,900	9,230

SEE COLLAR STANDARDS FOR COLLAR STRENGTHS. LOWER STRENGTH (PIN OR COLLAR) DETERMINES SYSTEM STRENGTH.

GENERAL NOTES:
1. Head edge out of roundness shall not exceed "F."
2. Concentricity: Conical surface of head to "D" diameter within .005 FIR.
3. "H" dimensioned from maximum "D" diameter.
4. Dimensions to be met after plating.
5. Surface texture per ANSI B46.1.
6. Hole preparation per NAS618.
7. Curved or flat edge manufacturer's option.

MATERIAL: Alloy steel per Spec. MIL-S-[illegible]00, MIL-S-5626, or MIL-S-6049.

HEAT TREAT: 108,000 psi shear minimum ([illegible]0,000—200,000 psi tensile per Spec. MIL-H-6875).

FINISH: HST135-( )-( ) = Cadmium plate per Spec. QQ-P-416, Type II, Class 2, and cetyl alcohol lube per Hi-Shear Spec. 305.

SPECIFICATION: Hi-Lite Product Specification 380.

CODE: First dash number indicates nominal diameter in 1/32nds.
Second dash number indicates maximum grip in 1/16ths.

HOW TO ORDER
EXAMPLES: Pin Part Number Only

HST135-8-8
- 8/16 or 1/2 Maximum Grip Length
- 8/32 or 1/4 Nominal Diameter Pin
- Pin Part Number

Pin and Collar Assembly Part Number Combination

HST1351081-8-8
- Size and Grip Length, See Above Example
- Collar Part Number
- Pin Part Number

U.S. Patent 4,326,825.
Other U.S. and foreign patents pending.
"Hi-Lite" and "Hi-Lite ST" are trademarks of Hi-Shear Corporation.

DRAWN	DATE	TITLE
D. P. S.	6-17-83	HI-LITE ST™ PIN
APPROVED	DATE	100° FLUSH CROWN HEAD
E.C. Backes	6-17-83	ALLOY STEEL
		1/16" GRIP VARIATION
REVISION	DATE	DRAWING NUMBER
		HST135

©1983 Hi-Shear Corporation

HST135

2-1599136