LISI AEROSPACE – Please refer to Central Documentation Website to check validity

STANDARDS COMMITTEE FOR HI-LOK® PRODUCTS
2600 SKYPARK DRIVE, TORRANCE, CALIFORNIA 90509

HI-SHEAR CORPORATION (PATENT HOLDER)
VOI-SHAN INDUSTRIES, INC. (LICENSEE)

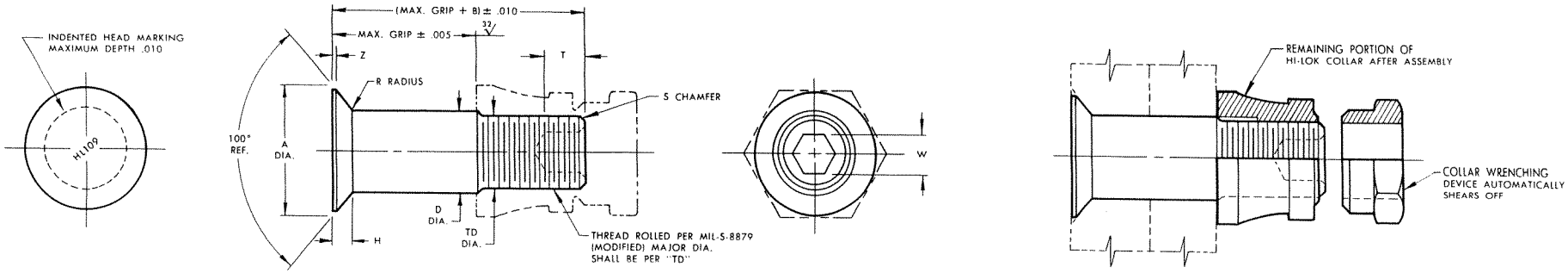

HI-LOK PIN

HI-LOK PIN AND COLLAR AFTER ASSEMBLY

FIRST DASH NO.	NOM. DIA.	A DIA.	B REF.	D DIA.	TD DIA.	F	H	R RAD.	Z	S CHAMFER	THREAD	SOCKET W HEX	SOCKET T DEPTH
– 5	5/32	.2922 .2874	.312	.1635 .1625	.1595 .1570	.004	.0540 .0520	.025 .015	.010 .005	1/32" x 45°	8-32UNJC-3A Modified	.0801 .0791	.135 .115
– 6	3/16	.3536 .3486	.325	.1895 .1885	.1840 .1810	.005	.0688 .0667	.030 .020	.015 .005	1/32" x 45°	10-32UNJF-3A Modified	.0806 .0791	.135 .115
– 8	1/4	.4732 .4682	.395	.2495 .2485	.2440 .2410	.006	.0939 .0918	.030 .020	.015 .005	1/32" x 45°	1/4-28UNJF-3A Modified	.0967 .0947	.150 .130
– 10	5/16	.5619 .5569	.500	.3120 .3110	.3060 .3020	.007	.1048 .1027	.040 .030	.015 .005	3/64" x 45°	5/16-24UNJF-3A Modified	.1295 .1270	.170 .150
– 12	3/8	.6912 .6862	.545	.3745 .3735	.3680 .3640	.008	.1329 .1308	.040 .030	.015 .005	3/64" x 45°	3/8-24UNJF-3A Modified	.1617 .1582	.200 .180
– 14	7/16	.8041 .7969	.635	.4370 .4360	.4310 .4260	.009	.1540 .1510	.050 .040	.022 .005	3/64" x 45°	7/16-20UNJF-3A Modified	.1930 .1895	.230 .210
– 16	1/2	.9166 .9095	.685	.4995 .4985	.4930 .4880	.010	.1750 .1720	.050 .040	.022 .005	3/64" x 45°	1/2-20UNJF-3A Modified	.2242 .2207	.260 .240

MECHANICAL PROPERTIES OF PIN AND COLLAR ASSEMBLY						
DOUBLE SHEAR POUNDS MINIMUM	ALUMINUM COLLARS * HL70 HL79 HL82			STEEL COLLARS * HL94 HL97		
	TENSION LBS. MIN.			TENSION LBS. MIN.		
5,280	1,400			1,700		
7,060	1,600			2,500		
12,260	3,000			4,300		
19,160	5,000			6,300		
27,600	7,000			8,700		
37,500	9,500			12,100		
49,100	12,500			15,300		

GENERAL NOTES:
1. Head edge out of roundness shall not exceed "F".
2. Concentricity: Conical surface of head to "D" diameter within .005 TIR.
3. "H" is dimensioned from maximum "D" diameter.
4. Dimensions to be met after plating.
5. Surface roughness per MIL-STD-10.
6. Hole preparation per NAS618.

MATERIAL: Type 431 stainless steel per QQ-S-763.

HEAT TREAT: 125,000 psi shear minimum.

FINISH: HL109-( )-( ) = Cadmium plate per Spec. QQ-P-416, Type II, Class 3.

SPECIFICATION: Hi-Lok Product Spec. 340, Section 3.

CODE: First dash number indicates nominal diameter in 1/32nds.
Second dash number indicates maximum grip in 1/16ths.

HOW TO ORDER EXAMPLES:

Pin Part Number Only
HL109-8-8
- 8/16 or 1/2 Maximum Grip Length
- 8/32 or 1/4 Nominal Diameter Pin
- Pin Part Number with Type II Cadmium Plate

Pin and Collar Assembly Part Number Combination
HL10979-8-8
- Size and Grip Length, See Above Example
- Collar Part Number
- Pin Part Number

* SEE REFERENCE COLLAR STANDARDS PAGE FOR DETAIL DIMENSIONS.

U.S. Patents 2,940,495; 3,138,987; Design 191,883.
Other U.S. and Foreign Patents granted and pending.

DRAWN	DATE	hi-lok® PIN
Shrode	11-3-67	100° FLUSH MS20426 HEAD TYPE 431 STAINLESS STEEL 1/16" GRIP VARIATION
APPROVED J. Miller	DATE 11-3-67	
REVISION	DATE	DRAWING NUMBER HL109

HL109

2-1501

© 1967, Hi-Shear Corporation

CODE IDENTIFICATION NO. 73197