LISI AEROSPACE – Please refer to Central Documentation Website to check validity

5300016-( )( )

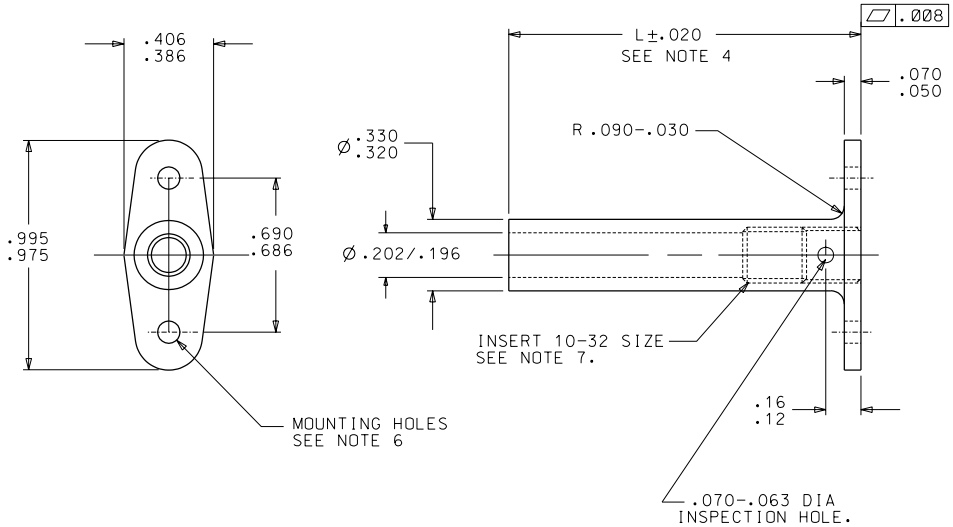

IDENTIFICATION:
RUBBER STAMP OR EQUIVALENT THE TMC PART NO. AND LETTER "M"
PARTS WITHOUT SUFFICIENT SPACE WILL BE BAGGED AND TAGGED.

NOTES: (UNLESS OTHERWISE SPECIFIED)

1. MATERIAL: 6061-T6 ALUMINUM PER QQ-A-430.

2. FINISH: ANODIZED PER MIL-A-8625, TYPE I, OR CHEMICAL CONVERSION COATING PER MIL-C-5541, CL 1A.

2.1 HELICAL INSERT:
SUFFIX "W" = DRY FILM LUBE (MS21209F1-15L)
NO SUFFIX = NO DRY FILM LUBE (MS21209F1-15)
SUFFIX "Y" = CADMIUM PLATE (MS21209F1-15P)

3. NO BURRS AND BREAK ALL SHARP EDGES.

4. L = LENGTH IN .100 INCREMENTS
-3 = .300, -30 = 3.000, MIN LENGTH = -3
AVAILABLE IN .050 INCREMENTS (-1.5 = .150)

5. -5 AND BELOW HAVE NO INSPECTION HOLE, MUST HAVE "NH" SUFFIX

6. NO SUFFIX = .103/.098 DIA RIVET HOLES, NO LUBE ON INSERT
SUFFIX "A" = .135/.128 DIA RIVET HOLES
SUFFIX "NH" = NO INSPECTION HOLE
SUFFIX "B" = DEBURRED INSPECTION HOLE

7. MS21209 HELICAL INSERT INSTALLED PER MS33537.

8. PART CALLOUT:
5300016-()()()()()
- NO CODE = INSPECTION HOLE; "NH" CODE = NO INSPECTION HOLE
- NO CODE = STANDARD INSERT FINISH; "W" CODE = DRY FILM LUBED INSERT; "Y" CODE = CADMIUM PLATED INSERT
- NO CODE = INSPECTION HOLE NOT DEBURRED; "B" CODE = DEBURRED INSPECTION HOLE
- NO CODE = .098-.103 DIA RIVET HOLES; "A" CODE = .128-.135 DIA RIVET HOLES
- LENGTH CODE

FAA-TSO AUTHORIZED PART

ISSUE	DESCRIPTION	DATE
G	ECN # 7519	8/8/01
F	ECN # 7014	9-6-00
	REVISION	9853-001

NEXT ASSEMBLY

UNLESS OTHERWISE SPECIFIED DIMENSIONS ARE IN INCHES. TOLERANCES DECIMALS FRACTION ANGLES

MATERIAL: NOTED

HEAT TREAT: ——

FINAL PROTECTIVE FINISH: NOTED

		DATE
DRAWN BY:	CKT	3/25/99
CHECKED BY:	R.A.D.	03-31-99
APPROVED BY:	R.A.D.	03-31-99
APPROVED BY:	D. MARTIN	03-30-99
MFG. ACCEPT.:	T. CORONA	03-31-99

THE MONADNOCK COMPANY
CITY OF INDUSTRY, CALIFORNIA

TITLE: FLANGE, SUPPORT, 1 PIECE, 2 LUG, UPRIGHT

CODE INDENT. NO.	SIZE	DRAWING NUMBER:
60119	B	5300016-( )( )

SCALE: NONE | SALES | SHEET 1 OF 1