13400018

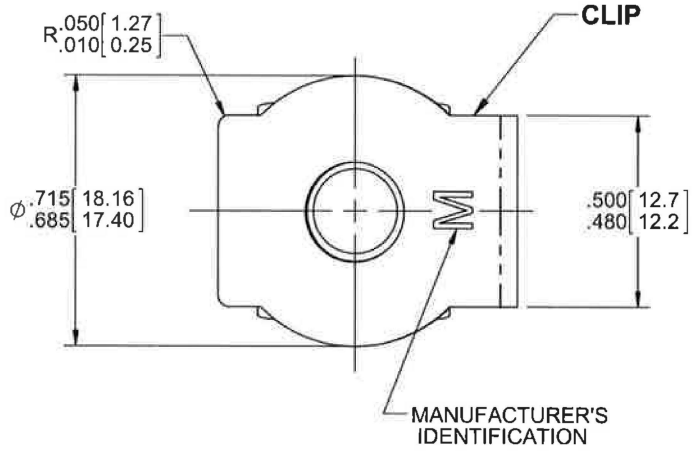

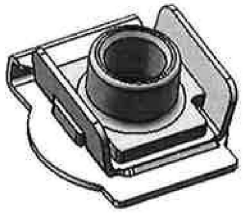

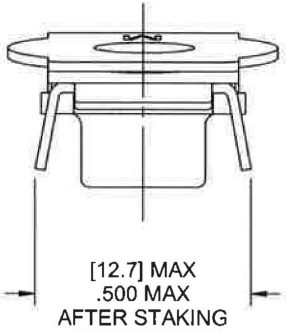

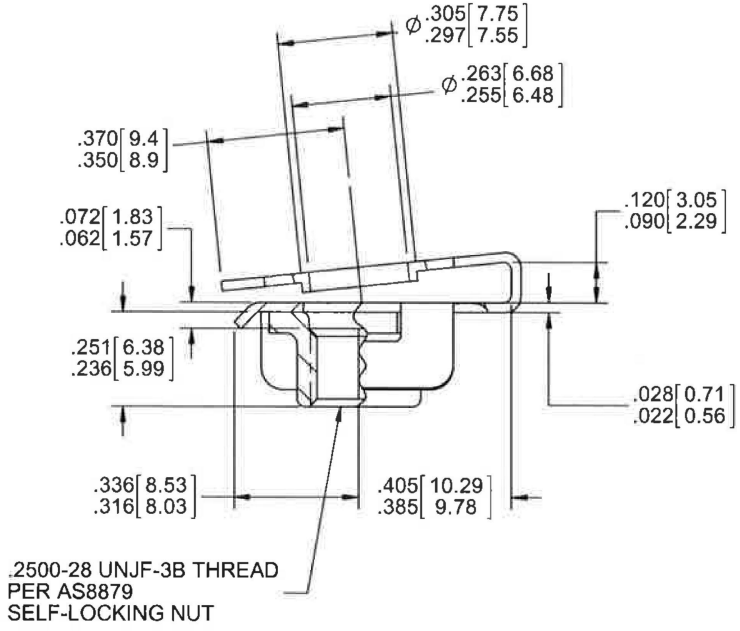

(B) NOTES: (UNLESS OTHERWISE SPECIFIED)

1. MATERIAL:
1.1 CLIP: A286 CRES PER AMS5525.
1.2 NUT: A286 CRES PER AMS5732 OR AMS5737.

2. HEAT TREAT:
2.1 CLIP: NONE.
2.2 NUT: HRC 34-48.

3. FINISH:
3.1 CLIP: PASSIVATE PER AS41100-09 NOTE 8.
3.2 NUT: SILVER PLATED PER AMS2411, .0002 [0.005] - .0006 [0.015] THICK. MINIMUM THICKNESS .0002[0.005] AT THREAD PITCH DIAMETER.

4. DIMENSIONS IN INCHES, MILLIMETERS IN ( )

5. WEIGHT: 0.95 LBS./100 (APPROX.)

6. CLIP NUT IS DESIGNED FOR USE WITH PANEL THICKNESS .035-.080 (0.90-2.03)

REV.	ECN NUMBER	BY	DATE
B	11243	JC	12/9/16
A	10078	TD	3/4/13

REPRODUCTION OF THIS DRAWING OR MANUFACTURE OF THE PROPRIETARY PARTS SHOWN HERE WITHOUT THE WRITTEN PERMISSION OF LISI AEROSPACE - THE MONADNOCK COMPANY IS PROHIBITED.

NEXT ASSEMBLY
END ITEM

THIRD ANGLE PROJECTION

UNLESS OTHERWISE SPECIFIED DIMENSIONS ARE IN INCHES. TOLERANCES ARE AS FOLLOWS:
DECIMALS .XX ±.01 .XXX ±.005 — FRACTION - — ANGLES ±2°

MATERIAL: NOTED
HEAT TREAT: NOTED
FINAL PROTECTIVE FINISH: NOTED

IBM NUMBER: -
PROJECT NUMBER: -
DRAWN BY: TD DATE: 3/4/13
APPROVED BY: - DATE: -

lisi AEROSPACE
THE MONADNOCK COMPANY
16728 E. GALE AVE.
CITY OF INDUSTRY, CALIFORNIA

TITLE: NUT ASSEMBLY, .2500-28 SIZE, SELF LOCKING

CODE IDENT. NO. 60119 | SIZE A | DRAWING NUMBER 13400018

SCALE: NONE | SALES | SHEET 1 OF 1

FORME050A rev.G