LISI AEROSPACE – Please refer to Central Documentation Website to check validity

130330–1–2

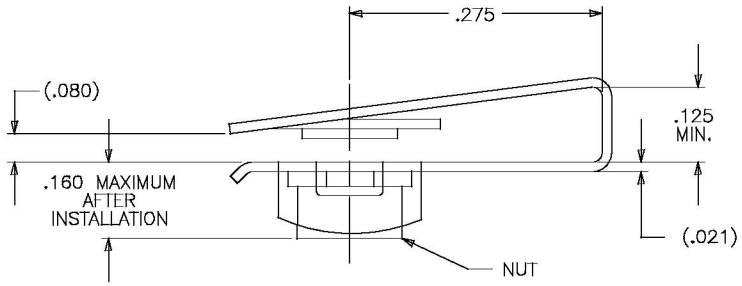

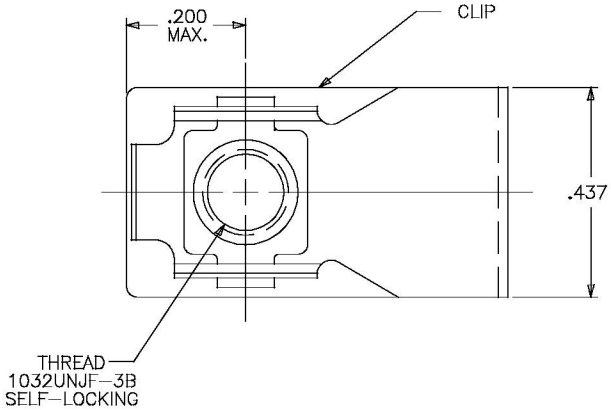

NOTES: (UNLESS OTHERWISE SPECIFIED)

1. MATERIAL:
1.1 CLIP: CARBON STEEL, HEAT TREATED.
1.2 NUT: CARBON STEEL, HEAT TREATED.

2. FINISH:
2.1 CLIP: CADMIUM PLATED PER QQ–P–416, TYPE II, CLASS 2.
2.2 NUT: CADMIUM PLATED PER QQ–P–416, TYPE II, CLASS 2.

3. INSTALLATION DATA:
3.1 INSTALLATION HOLE: .218–.261 DIA.
3.2 EDGE DISTANCE: .250 MAXIMUM.
3.3 PANEL THICKNESS: .070–.125

ISSUE	DESCRIPTION	DATE
REVISION		

NEXT ASSEMBLY
END ITEM

UNLESS OTHERWISE SPECIFIED DIMENSIONS ARE IN INCHES. TOLERANCES
DECIMALS .XX ±.02, .XXX ±.010, FRACTION ±2°, ANGLES

MATERIAL: NOTED

HEAT TREAT: NOTED

FINAL PROTECTIVE FINISH: NOTED

		DATE
DRAWN BY:	R.A.D.	06–02–97
CHECKED BY:	R.DUENAS	6–2–97
APPROVED BY:	CKT	6–12–97
APPROVED BY:	B.GUEVARA	6–13–97
MFG. ACCEPT.:	T.CORONA	6–9–97

THE MONADNOCK COMPANY
CITY OF INDUSTRY, CALIFORNIA

TITLE: CLIP NUT ASSEMBLY, 1032 SIZE, LOCKING

CODE INDENT. NO.	SIZE	DRAWING NUMBER:
60119	B	130330–1–2

SCALE: NONE | SALES | SHEET 1 OF 1