hi-shear CORPORATION
2600 Skypark Drive
Torrance, California 90509 U.S.A.
Telephone (310) 326-8110
FAX (310) 784-4144

"CAGE" = Commercial And Government Entity

HI-SHEAR CORPORATION, U.S.A .....(Patent Holder) Division of Hi-Shear Industries, Inc., U.S.A.	CAGE No. 73197	KAMAX-WERKE Germany .....(Licensee-EEC Countries) Rudolph Kellerman GmbH & Co.	
AIR INDUSTRIES CO., INC. (Licensee - U.S.A. & Canada	CAGE No. 06725	SIMMONDS S.A. France.....(Licensee-EEC Countries-Collars)	
SPS TECHNOLOGIES, U.S.A. (Licensee)	CAGE No. 56878	St.-CHAMOND GRANAT S.A. France (Licensee-EEC Countries)	
HI-SHEAR FASTENERS EUROPE LTD., U.K. (Licensee) Division of Hi-Shear Industries, Inc., U.S.A.	CAGE No. OLB68	TOKYO SCREW COMPANY, Japan.....(Licensee-Japan)	

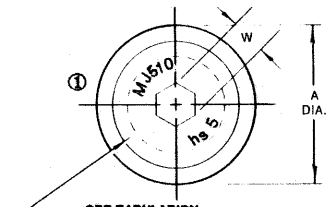

SEE TABULATION
INDENTED HEAD MARKING MAXIMUM DEPTH 0.25.
"hs" indicates HI-SHEAR trademark
The number(s) following the trademark indicate first dash number. Arrangement optional.

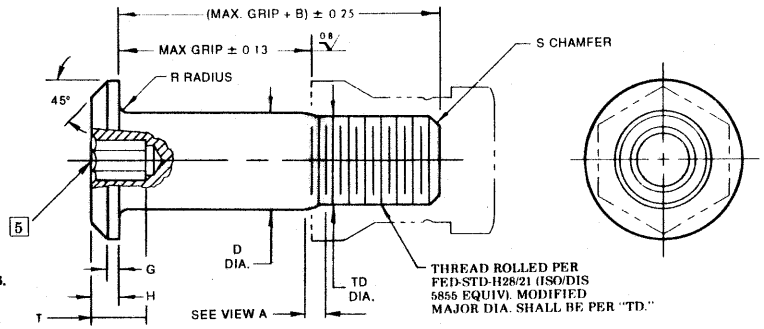

HI-LITE® ST™ PIN

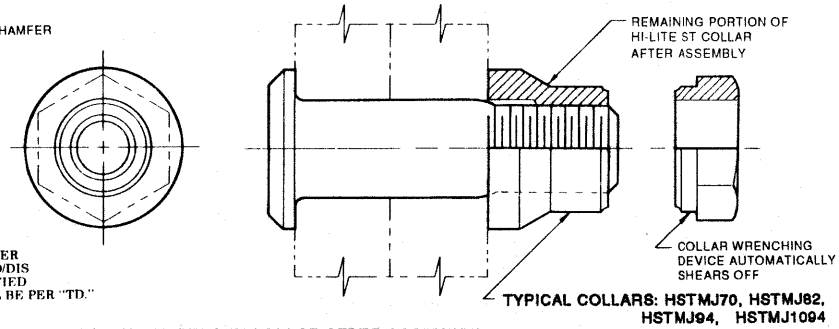

HI-LITE® ST™ PIN AND COLLAR AFTER ASSEMBLY

FIRST DASH NO.	① HEAD MARKING	NOM. DIA.	A DIA.	B REF.	① D DIA. HSTMJ510 AND HSTMJ510YY	D DIA. HSTMJ510AZ	TD DIA.	G REF.	H	R RAD.	S CHAMFER REF.	THREAD (MODIFIED)	SOCKET ★ W HEX.	SOCKET T HEX DEPTH MIN.	[4] DOUBLE SHEAR NEWTONS MINIMUM	TENSION NEWTONS MINIMUM
-05	MJ510 hs5	5	8.15 7.65	7.65	4.990 4.978	4.990 4.965	4.90 4.84	0.8	1.40 1.15	0.65 0.40	0.8 x 37°	MJ5 x 0.8 - 4h	2.58 2.52	2.25	25,700	11,800

SEE COLLAR STANDARDS FOR COLLAR STRENGTHS. LOWER STRENGTH (PIN OR COLLAR) DETERMINES SYSTEM STRENGTH.

GENERAL NOTES:
1. Concentricity: "A" to "D" diameter within .010 FIR.
2. Surface texture per ISO/R468.
3. Dimensions to be met after finish.
4. 2.50 minimum grip length required for double shear.
5. Evidence of broken edge across points.

① MATERIAL: 6Al-4V titanium alloy per Spec. AMS4928 or AMS4967 for all sizes.

HEAT TREAT: 665 MPa shear minimum.

FINISH:
HSTMJ510-( )-( ) = Surface coating per Hi-Shear Spec. 306, Type I, color blue-violet (equivalent to LN9368 Blatt 4), with color black on thread end plus cetyl alcohol lube per Hi-Shear Spec. 305.
HSTMJ510AZ-( )-( )= Hi-Kote 1 aluminum coating per Hi-Shear Spec. 294 with color black on thread end plus cetyl alcohol lube per Hi-Shear Spec. 305.
HSTMJ510YY-( )-( )= Hi-Kote 2 solid film lube per Hi-Shear Spec. 292 on threads only, with color green on thread end and cetyl alcohol lube per Hi-Shear Spec. 305.

SPECIFICATION: Hi-Lite Product Specification No. M380 except thread and double shear requirement as noted.

CODE: First dash number indicates nominal diameter in 1mm. Second dash number indicates maximum grip in 1mm. See Finish note for explanation of code letters.

① HOW TO ORDER EXAMPLES:

Pin Part Number Only
HSTMJ510-05-8
- 8mm Maximum Grip Length
- 5mm Nominal Diameter Pin
- Pin Part Number

Pin and Collar Assembly Part Number Combination
HSTMJ510-70-05-8
- Size and Grip Length, See Above Example
- Collar Part Number
- Pin Part Number

THIS AREA OF SPECIAL CONFIGURATION AND COLD WORKING TO MEET PHYSICAL REQUIREMENTS

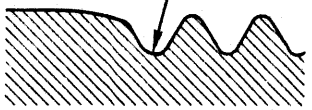

VIEW A
HI-LITE THREAD TRANSITION AREA. SEE SPECIFICATION FOR INSPECTION.

★ INCH STANDARD HEX.

U.S. Patents 4,326,825; 4,485,510 and 4,957,401. Other U.S. and foreign patents pending. "Hi-Lite" is a registered trademark and "Hi-Lite ST" is a trademark of Hi-Shear Corporation.

DRAWN	DATE	TITLE
T.Craine	11-22-93	HI-LITE® ST™ PIN (MJ METRIC SERIES) PROTRUDING SHEAR HEAD WITH HEX RECESS TITANIUM 1 mm GRIP VARIATION
APPROVED E.E. Beeles	DATE 11-24-93	
REVISION ①	DATE T.Craine 5-9-94	DRAWING NUMBER HSTMJ510

HSTMJ510

2-1599136

© 1994, Hi-Shear Corporation

LISI AEROSPACE – Please refer to Central Documentation Website to check validity