lisi AEROSPACE
hi-shear corporation
2600 SKYPARK DRIVE, TORRANCE, CALIFORNIA 90509 U.S.A.

HI-SHEAR Corporation, USA
a LISI AEROSPACE Company

Design Holder

CAGE No. 73197

For the current list of licensed manufacturers, please visit the LISI AEROSPACE website at:
HTTP://WWW.LISI-AEROSPACE.COM/LICENSES

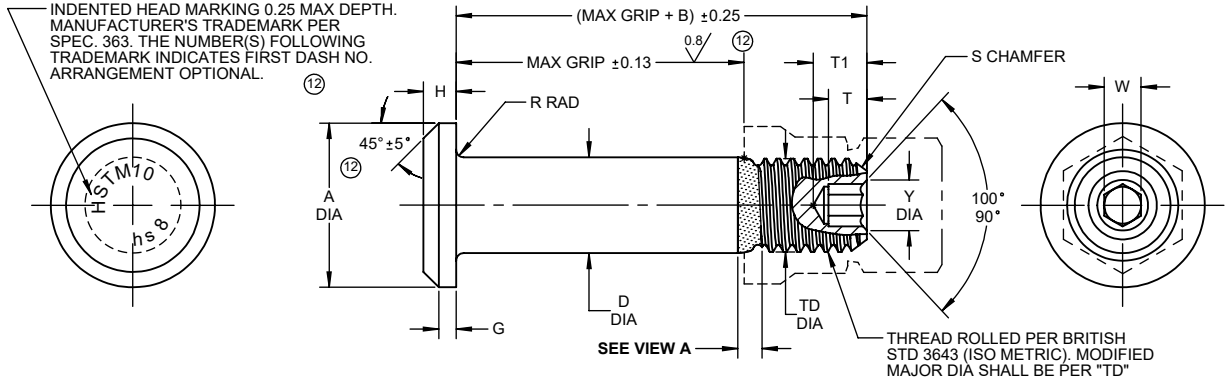

HI-LITE™ PIN

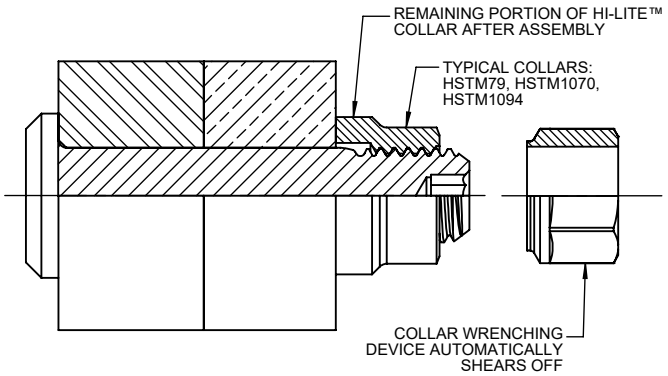

HI-LITE™ PIN AND COLLAR AFTER ASSEMBLY

FIRST DASH NO.	PIN NOM DIA	A DIA	B REF	D DIA WITHOUT COATING OR SOLID FILM	D DIA AFTER COATING OR SOLID FILM	TD DIA	G REF	H	R RAD	S CHAMFER REF	THREAD MODIFIED	SOCKET W HEX	SOCKET T DEPTH MIN	SOCKET T1 DEPTH MAX	SOCKET Y DIA	DOUBLE SHEAR NEWTONS MINIMUM	TENSION NEWTONS MINIMUM
04	4	6.65 6.25	7.11	3.990 3.978	3.990 3.965	3.91 3.86	0.6	1.20 0.95	0.65 0.40	0.8 x 37°	M4 x 0.7-4h	1.64 1.61	1.63	2.90	2.30 1.90	16400	7800
05	5	8.15 7.65	7.65	4.990 4.978	4.990 4.965	4.90 4.84	0.8	1.40 1.15	0.65 0.40	0.8 x 37°	M5 x 0.8-4h	2.05 2.01	2.00	3.43	3.05 2.60	25700	11800
06	6	10.20 9.70	8.65	5.990 5.978	5.990 5.965	5.88 5.81	0.9	1.75 1.50	0.65 0.40	0.8 x 37°	M6 x 1.0-4h	2.46 2.40	2.25	4.06	3.60 3.10	37000	18200
08	8	12.85 12.25	9.65	7.987 7.972	7.987 7.962	7.88 7.80	1.0	2.20 1.95	0.75 0.50	1.2 x 37°	M8 x 1.0-4h	3.29 3.22	2.75	5.08	4.60 4.05	65800	31600
10	10	16.20 15.40	11.82	9.987 9.972	9.987 9.962	9.88 9.80	1.3	2.65 2.40	0.75 .0.50	1.2 x 37°	M10 x 1.0-4h	4.11 4.02	3.50	5.97	5.55 5.00	102900	48900
12	12	18.80 18.00	13.33	11.984 11.966	11.984 11.959	11.87 11.76	1.5	2.95 2.70	0.75 0.50	1.2 x 37°	M12 x 1.25-4h	4.90 4.81	4.30	6.99	6.45 5.90	148100	66700

SEE COLLAR STANDARDS FOR COLLAR STRENGTHS. LOWER STRENGTH (PIN OR COLLAR) DETERMINES SYSTEM STRENGTH.

(12)

GENERAL NOTES:
1. Concentricity: "A" to "D" diameter within 0.25 FIM.
2. Dimensions are in millimeters and to be met after finish.
3. (12) Surface texture per ASME B46.1.
4. Use HSTM310 for oversize replacement.

MATERIAL: 6Al-4V titanium alloy per AMS4928 or AMS4967 for all sizes.
6AL-6V-2Sn titanium alloy per AMS4971 is acceptable for -10 and larger sizes.

HEAT TREAT: 655 N/mm² shear minimum.

FINISH:
HSTM10-( )-( ) = Surface coating per Hi-Shear Spec. 306, Type I, color blue-violet (equivalent to LN9368 Blatt 4), with color black on thread end, and cetyl alcohol lube per Hi-Shear Spec. 305.
(12) HSTM10AP( )-( ) = HI-KOTE™ 1 or HI-KOTE™ 1 NC aluminum pigmented coating per Hi-Shear Spec. 294, and cetyl alcohol lube per Hi-Shear Spec. 305.
(12) HSTM10AT( )-( ) = HI-KOTE™ 1 or HI-KOTE™ 1 NC aluminum pigmented coating per Hi-Shear Spec. 294.
(12) HSTM10AZ( )-( ) = HI-KOTE™ 1 or HI-KOTE™ 1 NC aluminum pigmented coating per Hi-Shear Spec. 294, with color black on thread end, and cetyl alcohol lube per Hi-Shear Spec. 305.
HSTM10BJ( )-( ) = I.V.D. aluminum coating per MIL-DTL-83488, Type II, Class 3, and cetyl alcohol lube per Hi-Shear Spec. 305.
(12) HSTM10NAP( )-( ) = HI-KOTE™ 1 NC aluminum pigmented coating per Hi-Shear Spec. 294, and cetyl alcohol lube per Hi-Shear Spec. 305.

SPECIFICATION: HI-LITE™ Product Specification M380.

CODE: First dash number indicates nominal diameter in 1 mm.
Second dash number indicates maximum grip in 1 mm.
See Finish note for explanation of code letters.

HOW TO ORDER EXAMPLE: Pin Part Number
HSTM10AP08-8
- 8 mm Maximum Grip Length
- 8 mm Nominal Diameter Pin
- Finish Code
- Pin Basic Part Number

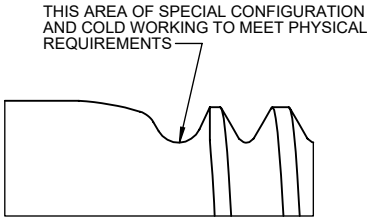

VIEW A

HI-LITE™ THREAD TRANSITION AREA
SEE SPECIFICATION FOR INSPECTION

"HI-LITE", "HST", AND "HI-KOTE", ARE TRADEMARKS OF HI-SHEAR CORPORATION

DRAWN BY	DATE	TITLE
D.P.S.	1982-10-08	HI-LITE™ PIN (METRIC SERIES) PROTRUDING SHEAR HEAD TITANIUM 1mm GRIP VARIATION
APPROVED J.G.WILCOX	DATE 1982-10-08	
REVISION (12)	DATE C.ARTOS 2024-02-15	DRAWING NUMBER HSTM10 1 OF 1

©2024 Hi-Shear Corporation

HSTM10