hi-shear CORPORATION
2600 SKYPARK DRIVE
TORRANCE, CALIFORNIA 90509
AREA CODE 213 · 775-3181 · 326-8110

LISI AEROSPACE – Please refer to Central Documentation Website to check validity

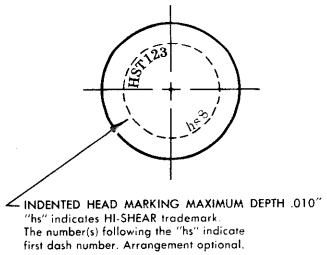

INDENTED HEAD MARKING MAXIMUM DEPTH .010"
"hs" indicates HI-SHEAR trademark.
The number(s) following the "hs" indicate first dash number. Arrangement optional.

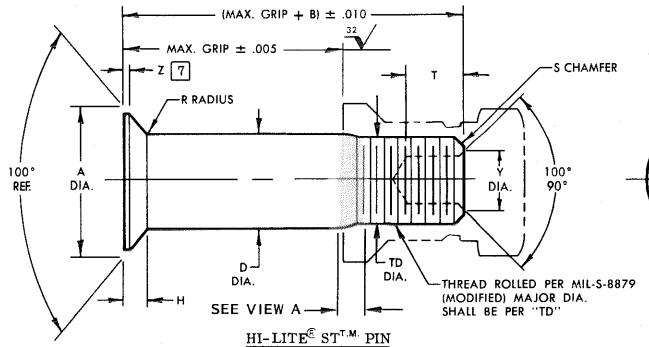

HI-LITE® ST T.M. PIN

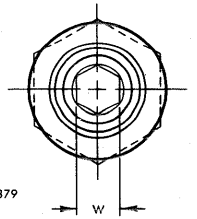

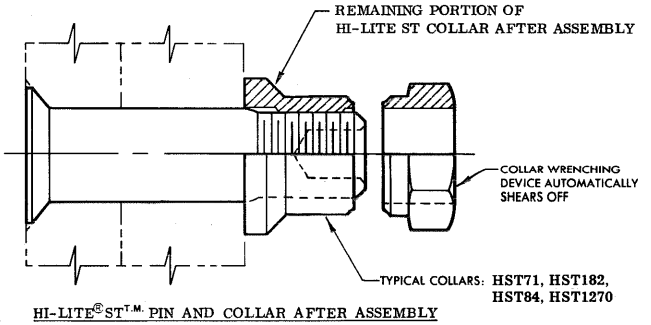

HI-LITE® ST T.M. PIN AND COLLAR AFTER ASSEMBLY

FIRST DASH NO.	NOM. DIA.	A DIA.	B REF.	D DIA.	TD DIA.	F	H	R RAD.	Z MAX.	S CHAMFER REF.	THREAD	SOCKET W HEX.	SOCKET T DEPTH	SOCKET Y DIA.	DOUBLE SHEAR POUNDS MINIMUM	TENSION POUNDS MINIMUM
					[1]				[7]							
–5					NOTE: USE HST23-6											
–6	13/64	.3536 .3486	.290	.2026 .2016	.1840 .1810	.005	.0633 .0612	.030 .020	.015	1/32" x 45°	10-32UNJF-3A Modified	.0806 .0791	.100 .080	.119 .104	2,900	1,150
–8	17/64	.4732 .4682	.320	.2651 .2641	.2440 .2410	.006	.0873 .0852	.030 .020	.015	1/32" x 45°	1/4-28UNJF-3A Modified	.0967 .0947	.110 .090	.142 .122	5,000	2,000
–10	21/64	.5619 .5569	.380	.3276 .3266	.3060 .3020	.007	.0983 .0962	.040 .030	.015	3/64" x 45°	5/16-24UNJF-3A Modified	.1295 .1270	.130 .110	.180 .160	7,600	2,800
–12	25/64	.6912 .6862	.420	.3901 .3891	.3680 .3640	.008	.1263 .1242	.040 .030	.015	3/64" x 45°	3/8-24UNJF-3A Modified	.1617 .1582	.160 .140	.217 .197	10,800	3,900
–14	29/64	.8041 .7969	.485	.4526 .4516	.4310 .4260	.009	.1475 .1445	.050 .040	.022	3/64" x 45°	7/16-20UNJF-3A Modified	.1930 .1895	.190 .170	.253 .233	14,500	6,000
–16	33/64	.9166 .9095	.525	.5151 .5141	.4930 .4880	.010	.1685 .1655	.050 .040	.022	3/64" x 45°	1/2-20UNJF-3A Modified	.2242 .2207	.220 .200	.289 .269	18,800	7,600

SEE COLLAR STANDARDS FOR COLLAR STRENGTHS. LOWER STRENGTH (PIN OR COLLAR) DETERMINES SYSTEM STRENGTH.

THIS AREA OF SPECIAL CONFIGURATION AND COLD WORKING TO MEET PHYSICAL REQUIREMENTS.

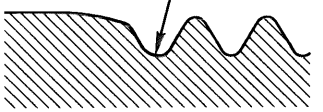

VIEW A
HI-LITE THREAD TRANSITION AREA, SEE SPECIFICATION FOR INSPECTION.

GENERAL NOTES:
1. Head edge out of roundness shall not exceed "F".
2. Concentricity: Conical surface of head to "D" diameter within .005 FIR.
3. "H" dimensioned from maximum "D" diameter.
4. Dimensions to be met after finish.
5. Surface texture per ANSI B46.1.
6. Hole preparation per NAS618.
7. Curved or flat edge manufacturer's option.
8. Use HST223 for oversize replacement

MATERIAL: 7075 aluminum alloy per QQ-A-225/9 or QQ-A-430.

HEAT TREAT: Age to T6 condition per MIL-H-6088.

FINISH:
HST123-( )-( ) = Anodize per MIL-A-8625, dye color natural, and cetyl alcohol lube per Hi-Shear Spec. 305.
HST123DU-( )-( ) = Anodize per MIL-A-8625, and solid film lube per MIL-L-46010, Type I.
HST123EY-( )-( ) = Anodize per MIL-A-8625, dye color yellow, and cetyl alcohol lube per Hi-Shear Spec. 305.
HST123TT-( )-( ) = Anodize per MIL-A-8625, dye color natural, and translube.

SPECIFICATION: Hi-Lite Product Specification 380.

CODE: First dash number indicates nominal diameter in1/32nds which HST123 oversize pin replaces.
Second dash number indicates maximum grip in 1/16ths.
See "Finish" note for explanation of code letters.

HOW TO ORDER
EXAMPLES: Pin Part Number Only
HST123DU-8-8
- 8/16 or 1/2 Maximum Grip Length
- Replaces 8/32 or 1/4 Nominal Diameter Pin
- Solid Film Lubricant
- Pin Part Number

Pin and Collar Assembly Part Number Combination
HST123DU71-8-8
- Size and Grip Length, See Above Example
- Collar Part Number
- Pin Finish
- Pin Part Number

U.S. Patents 4,326,825 and 4,485,510. Other U.S. and foreign patents pending. "Hi-Lite" is a registered trademark, and "Hi-Lite ST" is a trademark of Hi-Shear Corporation.

DRAWN	DATE	TITLE
Dept. 104	8-3-90	HI-LITE® ST T.M. PIN 100° FLUSH MS20426 SHEAR HEAD ALUMINUM ALLOY 1/16" GRIP VARIATION, 1/64" OVERSIZE
APPROVED	DATE	
	8-3-90	
REVISION	DATE	DRAWING NUMBER HST123

HST123

2-1599136

©1990, Hi-Shear Corporation