LISI AEROSPACE – Please refer to Central Documentation Website to check validity

STANDARDS COMMITTEE FOR HI-LOK® HI-TIGUE® PRODUCTS
2600 SKYPARK DRIVE, TORRANCE, CALIFORNIA 90509

HI-SHEAR CORPORATION, U.S.A. _____ (Patent Holder) ___ U.S. Federal Code I.D. No. 73197
Division of Hi-Shear Industries Inc., U.S.A.
AIRCRAFT FASTENERS (Forged Parts) LTD., U.K. ___ (Licensee)
Division of Hi-Shear Industries Inc., U.S.A.
VOI-SHAN, Division of VSI Corp., U.S.A. _____ (Licensee) ___ U.S. Federal Code I.D. No. 92215
SPS TECHNOLOGIES, U.S.A. _____ (Licensee) ___ U.S. Federal Code I.D. No. 56678
LITTON FASTENING SYSTEMS, U.S.A. _____ (Licensee) ___ U.S. Federal Code I.D. No. 97926
Division of Litton Systems Inc., U.S.A.

ST. CHAMOND-GRANAT, S.A. France _____ (Licensee—EEC Countries)
KAMAX-WERKE, Germany _____ (Licensee—EEC Countries)
Rudolph Kellerman GmbH & Co.
SIMMONDS, S.A. France _____ (Licensee—EEC Countries—Collars)
TOKYO SCREW COMPANY, Japan _____ (Licensee—Japan)
WEST COAST AEROSPACE INC., U.S.A. ___ (Licensee—Oversize Pins & Steel Collars)
U.S. Federal Code I.D. No. 60516

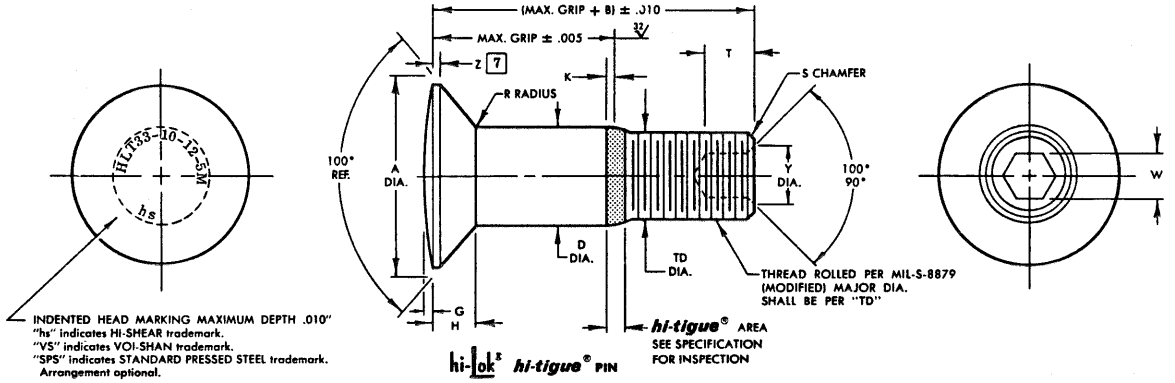

hi-lok® hi-tigue® PIN

FIRST DASH NO.	NOM. DIA.	A DIA.	B REF.	D DIA.	TD DIA.	F [1]	G	H	K REF.	R RAD.	Z [7] MAX.	S CHAMFER REF.	THREAD	SOCKET W HEX.	SOCKET T DEPTH	SOCKET Y DIA.	DOUBLE SHEAR POUNDS MINIMUM	TENSION POUNDS MINIMUM
−6	3/16	.3813 .3765	.303	.1895 .1890	.1840 .1810	.005	.015 .010	.0805 .0785	.016	.030 .020	.015	1/32" x 45°	10-32UNJF-3A Modified	.0806 .0791	.100 .080	.119 .104	7,060	4,350
−8	1/4	.5066 .5018	.352	.2495 .2490	.2440 .2410	.006	.015 .010	.1080 .1060	.021	.030 .020	.015	1/32" x 45°	1/4-28UNJF-3A Modified	.0967 .0947	.110 .090	.142 .122	12,260	7,750
−10	5/16	.6335 .6287	.406	.3120 .3115	.3060 .3020	.007	.015 .010	.1350 .1330	.026	.040 .030	.015	3/64" x 45°	5/16-24UNJF-3A Modified	.1295 .1270	.130 .110	.180 .160	19,160	12,300
−12	3/8	.7604 .7556	.431	.3745 .3740	.3680 .3640	.008	.015 .010	.1620 .1600	.030	.040 .030	.015	3/64" x 45°	3/8-24UNJF-3A Modified	.1617 .1582	.160 .140	.217 .197	27,600	19,100

GENERAL NOTES:
1. Head edge out of roundness shall not exceed "F."
2. Concentricity: Conical surface of head to "D" diameter within .005 FIR.
3. "H" is dimensioned from maximum "D" diameter.
4. Dimensions to be met before finish.
5. Surface texture per ANSI B46.1.
6. Hole preparation per NAS618.
7. Curved or flat edge manufacturer's option.

MATERIAL: PH13-8Mo stainless steel per Spec. AMS5629.

HEAT TREAT: 125,000 psi shear minimum.

FINISH: HLT33-( )-( )M = Passivate per Hi-Shear Spec. 258 and cetyl alcohol lube per Hi-Shear Spec. 305.
HLT33TB-( )-( )M = Hi-Kote 2 solid film lube per Hi-Shear Spec. 292 and cetyl alcohol lube per Hi-Shear Spec. 305.

④ SPECIFICATION: Hi-Lok Hi-Tigue Product Specification 342.

CODE: First dash number indicates nominal diameter in 1/32nds.
Second dash number indicates maximum grip in 1/16ths.
Third dash number (-5 only) indicates grip is 1/32nd longer than indicated by second dash number.
"M" indicates grip is in 16ths.
See "Finish" note for explanation of other code letters.

HOW TO ORDER EXAMPLES: Pin Part Numbers Only

HLT33TB-8-8M
- 8/16 or 1/2 Maximum Grip Length
- 8/32 or 1/4 Nominal Diameter Pin
- Pin Part Number

HLT33TB-10-12-5M
- Grip is in 16ths (Second Dash Number)
- Grip is 1/32 more than Second Dash Number, 25/32nds
- 12/16 or 3/4 Maximum Grip
- 10/32 or 5/16 Nominal Diameter
- Hi-Kote 2 Solid Film Lube Finish
- Pin Basic Part Number

U.S. patents 3,390,906; 3,578,367; and foreign patents. "Hi-Lok," "HL," "Hi-Tigue," and "HLT" are Registered Trademarks of Hi-Shear Corporation.

DRAWN	DATE	hi-lok® hi-tigue® PIN
D.P.S.	1-24-78	100° FLUSH CROWN MS24694 TENSION HEAD — SHORT THREAD PH13-8Mo STAINLESS STEEL 1/16" GRIP VARIATION
APPROVED	DATE	
J.G. Hillebox	1-24-78	
REVISION ④	DATE D.P.S. 6-7-84	DRAWING NUMBER HLT33

HLT33