LISI AEROSPACE – Please refer to Central Documentation Website to check validity

**STANDARDS COMMITTEE FOR HI-LOK® PRODUCTS**
2600 SKYPARK DRIVE, TORRANCE, CALIFORNIA 90509

② HI-SHEAR CORPORATION, U.S.A. (Patent Holder) U.S. Federal Code I.D. No. 73197
Division of Hi-Shear Industries Inc.
VOI-SHAN, Division of VSI Corp., U.S.A. (Licensee) U.S. Federal Code I.D. No. 92215
SPS TECHNOLOGIES, U.S.A. (Licensee) U.S. Federal Code I.D. No. 56878
LITTON FASTENING SYSTEMS, U.S.A.
Division of Litton Systems, Inc. (Licensee) U.S. Federal Code I.D. No. 97928

KAMAX-WERKE, Germany (Licensee)
Rudolph Kellerman GmbH & Co.
ST. CHAMOND-GRANAT, S.A. France (Licensee)
TOKYO SCREW COMPANY, Japan (Licensee)

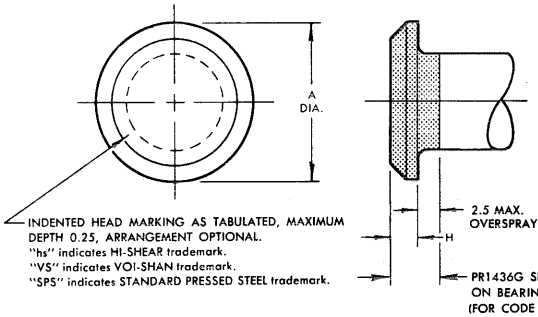


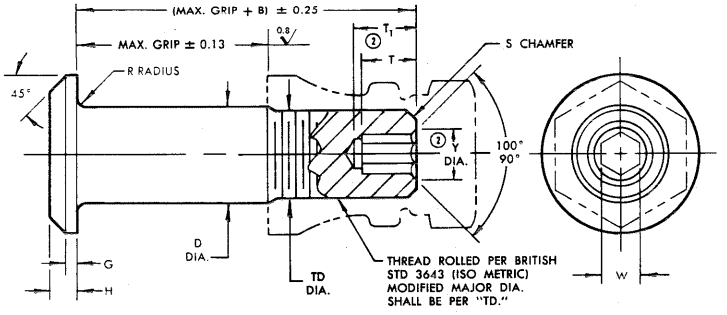


HI-LOK PIN (METRIC)

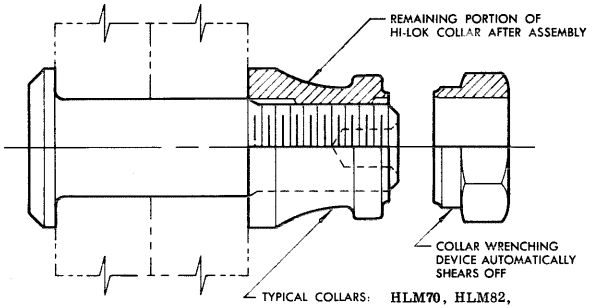


HI-LOK PIN AND COLLAR AFTER ASSEMBLY

② 5

SEE COLLAR STANDARDS FOR COLLAR STRENGTHS. LOWER STRENGTH (PIN OR COLLAR) DETERMINES SYSTEM STRENGTH.

| FIRST DASH NO. | HEAD MARKING | NOM. DIA. | A DIA. | B REF. | D DIA. HLM34 | D DIA. HLM34HB OR HLM34TB | TD DIA. | G REF. | H | R RAD. | | S CHAMFER REF. | THREAD (MODIFIED) | SOCKET * W HEX. | SOCKET T HEX DEPTH MIN. | SOCKET $T_1$ DEPTH MAX. | SOCKET Y DIA. | DOUBLE SHEAR NEWTONS MINIMUM | TENSION NEWTONS MINIMUM |
|---|---|---|---|---|---|---|---|---|---|---|---|---|---|---|---|---|---|---|---|
| -04 | HLM34M4 | 4 | 6.65<br>6.25 | 8.35 | 3.990<br>3.978 | 3.990<br>3.965 | 3.91<br>3.86 | 0.6 | 1.20<br>0.95 | 0.65<br>0.40 | | 0.8 x 45° | M4 x 0.7-4h | 1.64<br>1.61 | 1.80 | 2.95 | 2.30<br>1.90 | 21600 | 10300 |
| -05 | HLM34M5 | 5 | 8.15<br>7.65 | 8.65 | 4.990<br>4.978 | 4.990<br>4.965 | 4.90<br>4.84 | 0.8 | 1.40<br>1.15 | 0.65<br>0.40 | | 0.8 x 45° | M5 x 0.8-4h | 2.05<br>2.01 | 2.00 | 3.05 | 3.05<br>2.60 | 33800 | 15500 |
| -06 | HLM34M6 | 6 | 10.20<br>9.70 | 10.70 | 5.990<br>5.978 | 5.990<br>5.965 | 5.88<br>5.81 | 0.9 | 1.75<br>1.50 | 0.65<br>0.40 | | 0.8 x 45° | M6 x 1.0-4h | 2.46<br>2.40 | 2.25 | 3.40 | 3.60<br>3.10 | 48600 | 23900 |
| -08 | HLM34M8 x 1 | 8 | 12.85<br>12.25 | 12.95 | 7.987<br>7.972 | 7.987<br>7.962 | 7.88<br>7.80 | 1.0 | 2.20<br>1.95 | 0.75<br>0.50 | | 1.2 x 45° | M8 x 1.0-4h | 3.29<br>3.22 | 2.80 | 4.15 | 4.60<br>4.05 | 86500 | 41500 |
| -10 | HLM34M10 x 1 | 10 | 16.20<br>15.40 | 15.20 | 9.987<br>9.972 | 9.987<br>9.962 | 9.88<br>9.80 | 1.3 | 2.65<br>2.40 | 0.75<br>0.50 | | 1.2 x 45° | M10 x 1.0-4h | 4.11<br>4.02 | 3.80 | 5.35 | 5.55<br>5.00 | 135100 | 64200 |
| -12 | HLM34M12 x 1.25 | 12 | 18.80<br>18.00 | 18.15 | 11.984<br>11.966 | 11.984<br>11.959 | 11.87<br>11.76 | 1.5 | 2.95<br>2.70 | 0.75<br>0.50 | | 1.2 x 45° | M12 x 1.25-4h | 4.90<br>4.81 | 4.55 | 6.30 | 6.45<br>5.90 | 194500 | 87600 |

* Inch standard hex.

GENERAL NOTES:
1. Concentricity: Head to "D" diameter within 0.25 FIR.
2. Dimensions to be met after finish.
3. Surface texture per ISO/R468.
4. Use HLM334 for oversize replacement.
② 5. Parts made prior to this revision are OK to use.

MATERIAL: PH13-8Mo stainless steel per Spec. AMS5629.

HEAT TREAT: 860 MPa shear minimum.

FINISH:
HLM34-( )-( ) = Passivate per Hi-Shear Spec. 258 and cetyl alcohol lube per Hi-Shear Spec. 305.
HLM34TB-( )-( ) = Hi-Kote 2 solid film lube per Hi-Shear Spec. 292 and cetyl alcohol lube per Hi-Shear Spec. 305.
HLM34HB-( )-( ) = Hi-Kote 2 solid film lube per Hi-Shear Spec. 292 and apply precoat No. PR1436G sealant (.051-.127 mm thick) plus cetyl alcohol lube per Hi-Shear Spec. 305.

SPECIFICATION: Hi-Lok Product Specification No. M342.

CODE: First dash number indicates nominal diameter in 1 mm.
Second dash number indicates maximum grip in 1 mm.
See "Finish" note for explanation of code letters.

HOW TO ORDER EXAMPLES:

Pin Part Number Only
HLM34-04-8
- 8 mm Maximum Grip Length
- 4 mm Nominal Diameter Pin
- Pin Part Number

Pin and Collar Assembly Part Number Combination
HLM3494-04-8
- Size and Grip Length, See Above Example
- Collar Part Number
- Pin Part Number

U.S. patents 2,927,491; 2,940,495; 3,027,789; 3,138,987.
Other U.S. and Foreign patents granted and pending.
"Hi-Lok" and "HL" are Registered Trademarks of Hi-Shear Corporation.

| DRAWN | DATE | hi-lok® PIN (METRIC SERIES) |
|---|---|---|
| D.P.S. | 9-6-78 | PROTRUDING SHEAR HEAD |
| APPROVED | DATE | PH13-8Mo STAINLESS STEEL |
| R. Tang | 9-6-78 | 1 mm GRIP VARIATION |
| REVISION ② | DATE D.P.S. 5-16-80 | DRAWING NUMBER HLM34 |

HLM34

2-1501

© 1980, Hi-Shear Corporation