lisi AEROSPACE
hi-shear corporation
2600 SKYPARK DRIVE, TORRANCE, CALIFORNIA 90509 U.S.A.

HI-SHEAR Corporation, USA
a LISI AEROSPACE Company

Design Holder

CAGE No. 73197

For the current list of licensed manufacturers, please visit the LISI AEROSPACE website at:
HTTP://WWW.LISI-AEROSPACE.COM/LICENSES

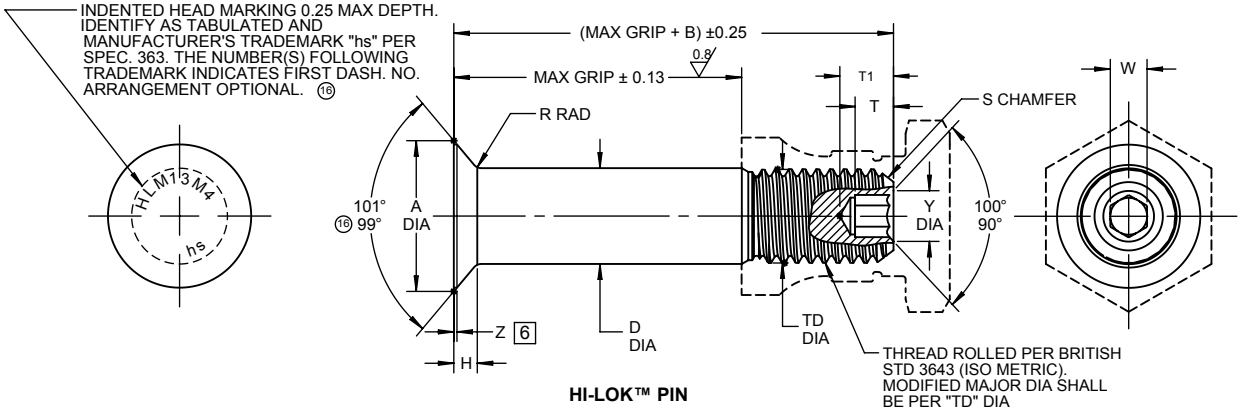

HI-LOK™ PIN

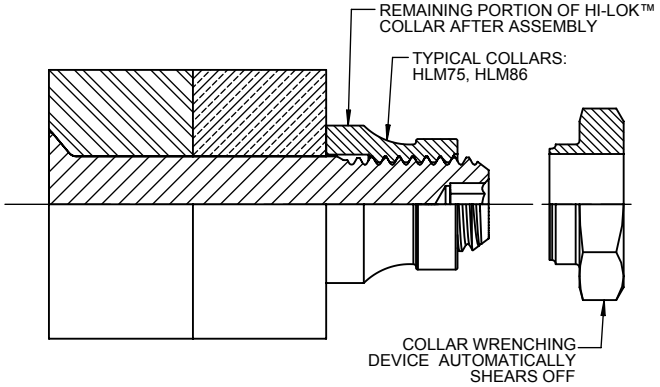

HI-LOK™ PIN AND COLLAR AFTER ASSEMBLY

SEE COLLAR STANDARDS FOR COLLAR STRENGTHS. LOWER STRENGTH (PIN OR COLLAR) DETERMINES SYSTEM STRENGTH

FIRST DASH NO.	HEAD MARKING	PIN NOM DIA	A DIA	B REF	D DIA (1) WITHOUT COATING OR SOLID FILM LUBE	D DIA (6) AFTER COATING OR SOLID FILM LUBE	TD DIA	F	H	R RAD	Z MAX	S CHAMFER REF	THREAD	SOCKET W HEX	SOCKET T DEPTH MIN	SOCKET T1 DEPTH MAX	SOCKET Y DIA	DOUBLE SHEAR NEWTONS MINIMUM	TENSION NEWTONS MINIMUM
04	HLM13M4	4	8.13 7.99	8.35	3.990 3.978	3.990 3.965	3.91 3.86	0.11	1.74 1.68	0.65 0.40	0.25	0.8 x 37°	M4 x 0.7-4h Modified	1.64 1.61	1.80	2.95	2.30 1.90	16400	9800
05	HLM13M5	5	10.13 9.99	8.65	4.990 4.978	4.990 4.965	4.90 4.84	0.13	2.16 2.10	0.75 0.50	0.38	0.8 x 37°	M5 x 0.8-4h Modified	2.05 2.01	2.00	3.05	3.05 2.60	25700	15600
06	HLM13M6	6	12.13 11.99	10.70	5.990 5.978	5.990 5.965	5.88 5.81	0.16	2.58 2.52	075 0.50	0.38	0.8 x 37°	M6 x 1.0-4h Modified	2.46 2.40	2.25	3.40	3.60 3.10	37000	22200
08	HLM13M8 x 1	8	16.13 15.99	12.95	7.987 7.972	7.987 7.962	7.88 7.80	0.18	3.42 3.36	1.00 0.75	0.38	1.2 x 37°	M8 x 1.0-4h Modified	3.29 3.22	2.80	4.15	4.60 4.05	65800	42000
10	HLM13M10 x 1	10	20.13 19.99	15.20	9.987 9.972	9.987 9.962	9.88 9.80	0.21	4.26 4.20	1.00 0.75	0.38	1.2 x 37°	M10 x 1.0-4h Modified	4.11 4.02	3.80	5.35	5.55 5.00	102900	68000
12	HLM13M12 x 1.25	12	24.13 23.99	18.15	11.982 11.966	11.984 11.959	11.87 11.76	0.23	5.10 5.04	1.25 1.00	0.56	1.2 x 37°	M12 x 1.25-4h Modified	4.90 4.81	4.55	6.30	6.45 5.90	148100	100200

GENERAL NOTES:
1. Head edge out of roundness shall not exceed "F".
2. Concentricity: Conical surface of head to "D" diameter within .08 FIM.
3. "H" is dimensioned from maximum "D" diameter.
4. Surface texture per ISO/R468.
5. 16 Dimensions are in millimeters and to be met after finish.
6. Curved or flat edge manufacturer's option.
7. Use HLM313 for oversize replacement.
8. After February, 21st of 2015, HI-KOTE™ 1 aluminum pigmented coating per Hi-Shear Spec. 294 will be replaced by REACH compliant HI-KOTE™ 1 NC aluminum pigmented coating per Hi-Shear Spec. 294 on fasteners coated in European Union.

MATERIAL: 6AL-4V titanium alloy per AMS4928 or AMS4967 for all sizes.
6AL-6V-2Sn titanium alloy per AMS4971 is acceptable for -10 and larger sizes.

HEAT TREAT: 655 MPa shear minimum.

FINISH:
HLM13-( )-( ) = Surface coating per Hi-Shear Spec. 306, Type I, color blue-violet (equivalent to LN9368 Blatt 4), and cetyl alcohol lube per Hi-Shear Spec. 305.
8 HLM13AP( )-( ) = HI-KOTE™ 1 aluminum pigmented coating per Hi-Shear Spec. 294 and cetyl alcohol lube per Hi-Shear Spec. 305.
HLM13AU( )-( ) = Solid film lube per "Electrofilm" XSF-104.

SPECIFICATION: HI-LOK™ Product Specification M342.

CODE: First dash number indicates nominal diameter in 1 mm.
Second dash number indicates maximum grip in 1 mm.
See Finish note for explanation of code letters.

HOW TO ORDER
16 **EXAMPLE:**

Pin Part Number
HLM13AP-04-8
- 8 mm Maximum Grip Length
- 4 mm Nominal Diameter Pin
- Finish Code
- Pin Basic Part Number

"HI-LOK", "HL", AND "HI-KOTE", ARE TRADEMARKS OF HI-SHEAR CORPORATION

DRAWN BY	DATE	TITLE
ANS	1970-04-17	HI-LOK™ PIN (METRIC SERIES) 100° FLUSH TENSION HEAD TITANIUM 1/16 GRIP VARIATION
APPROVED R.TING	DATE 1970-04-20	
REVISION 16	DATE F.CARINGELLA 2017-10-12	DRAWING NUMBER **HLM13**

1 OF 1

©2017 Hi-Shear Corporation

HLM13