lisi AEROSPACE
hi-shear corporation
2600 SKYPARK DRIVE, TORRANCE, CALIFORNIA 90509 U.S.A.

HI-SHEAR Corporation, USA
a LISI AEROSPACE Company

Design Holder

CAGE No. 73197

④

For the current list of licensed manufacturers, please visit the LISI AEROSPACE website at:
*HTTP://WWW.LISI-AEROSPACE.COM/LICENSES*

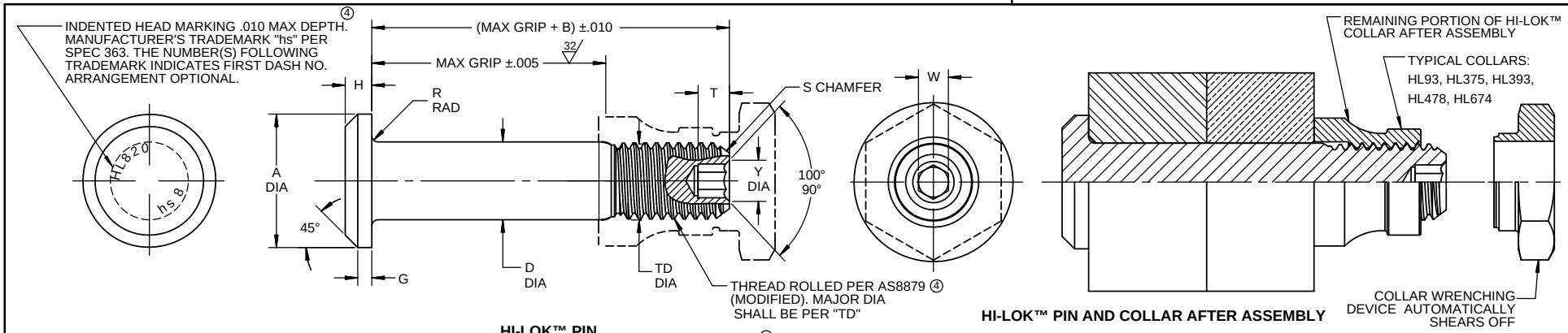


**HI-LOK™ PIN**

**HI-LOK™ PIN AND COLLAR AFTER ASSEMBLY**

④ ** 

| FIRST DASH NO. | PIN NOM DIA | A DIA | B REF | D DIA | TD DIA | G REF | H | R RAD | S CHAMFER REF | THREAD MODIFIED | SOCKET W HEX | SOCKET T DEPTH | SOCKET Y DIA | DOUBLE SHEAR POUNDS MINIMUM | TENSION POUNDS MINIMUM |
|---|---|---|---|---|---|---|---|---|---|---|---|---|---|---|---|
| 5 | 13/64 | NOTE: Use HL628-6 or HL764-6 | | | | | | | | | | | | | |
| 6 | 7/32 | .390<br>.370 | .325 | .2182<br>.2172 | .1840<br>.1810 | .035 | .074<br>.064 | .025<br>.015 | 1/32 x 45° | .1900-32<br>UNJF-3A | .0806<br>.0791 | .100<br>.080 | .119<br>.104 | 8,070 | 3,850 |
| 8 | 9/32 | .460<br>.435 | .395 | .2807<br>.2797 | .2440<br>.2410 | .045 | .090<br>.080 | .025<br>.015 | 1/32 x 45° | .2500-28<br>UNJF-3A | .0967<br>.0947 | .110<br>.090 | .142<br>.122 | 13,400 | 6,550 |
| 10 | 11/32 | .520<br>.490 | .500 | .3432<br>.3422 | .3060<br>.3020 | .055 | .112<br>.102 | .030<br>.020 | 3/64 x 45° | .3125-24<br>UNJF-3A | .1295<br>.1270 | .130<br>.110 | .180<br>.160 | 20,000 | 10,350 |
| 12 | 13/32 | .620<br>.585 | .545 | .4057<br>.4047 | .3680<br>.3640 | .075 | .140<br>.130 | .030<br>.020 | 3/64 x 45° | .3750-24<br>UNJF-3A | .1617<br>.1582 | .160<br>.140 | .217<br>.197 | 28,000 | 15,750 |
| 14 | 15/32 | .695<br>.660 | .635 | .4682<br>.4672 | .4310<br>.4260 | .095 | .160<br>.150 | .030<br>.020 | 3/64 x 45° | .4375-20<br>UNJF-3A | .1930<br>.1895 | .190<br>.170 | .253<br>.233 | 37,200 | 21,200 |
| 16 | 17/32 | .790<br>.755 | .685 | .5307<br>.5297 | .4930<br>.4880 | .095 | .188<br>.178 | .030<br>.020 | 3/64 x 45° | .5000-20<br>UNJF-3A | .2242<br>.2207 | .220<br>.200 | .289<br>.269 | 47,700 | 28,800 |
| 18 | 19/32 | .900<br>.865 | .770 | .5927<br>.5917 | .5550<br>.5500 | .125 | .210<br>.200 | .040<br>.025 | 1/16 x 45° | .5625-18<br>UNJF-3A | .2555<br>.2520 | .260<br>.240 | .326<br>.306 | 59,600 | 36,400 |
| 20 | 21/32 | .970<br>.935 | .825 | .6552<br>.6542 | .6180<br>.6120 | .140 | .238<br>.228 | .040<br>.025 | 1/16 x 45° | .6250-18<br>UNJF-3A | .2555<br>.2520 | .260<br>.240 | .326<br>.306 | 72,900 | 46,100 |
| 24 | 25/32 | 1.185<br>1.145 | 1.050 | .7802<br>.7792 | .7430<br>.7370 | .200 | .335<br>.320 | .045<br>.030 | 1/16 x 45° | .7500-16<br>UNJF-3A | .3185<br>.3150 | .330<br>.300 | .398<br>.378 | 103,000 | 66,900 |

SEE COLLAR STANDARDS FOR COLLAR STRENGTHS. LOWER STRENGTH (PIN OR COLLAR) DETERMINES SYSTEM STRENGTH

**GENERAL NOTES:**
1. Concentricity: "A" to "D" diameter within .010 FIR.
④ 2. Dimensions are in inches and to be met after plating.
[3] Non-lubed pins must be used with wet sealant or with lubed collars.
④ 4. Surface texture per ASME B46.1.
5. Hole preparation per NAS618.

**MATERIAL:** ④ Alloy steel per Spec. AMS6415, AMS6349 or AMS6322

**HEAT TREAT:** ④ 180,000-200,000 psi tensile per AMS-H-6875.

**FINISH:**
④ HL820-( )-( ) = Cadmium plate per Spec. AMS-QQ-P-416, Type II, Class 2 and cetyl alcohol lube per Hi-Shear Spec. 305.
④ HL820BJ-( )-( ) = I.V.D. aluminum coating per MIL-DTL-83488, Type II, Class 3, and cetyl alcohol lube per Hi-Shear Spec. 305.
④ [3] HL820BV-( )-( ) = I.V.D. aluminum coating per MIL-DTL-83488, Type II, Class 3, with color code blue on thread end.
④ [3] HL820PN-( )-( ) = Cadmium plate per Spec. AMS-QQ-P-416, Type II, Class 2. (See note 3.)

**SPECIFICATION:** HI-LOK™ Product Specification 342.

**CODE:** First dash number indicates nominal diameter in 1/32nds which HL820 oversize pin replaces.
Second dash number indicates maximum grip in 1/16ths.
See Finish note for explanation of code letters.

**HOW TO ORDER**
④ **EXAMPLE:**

Pin Part Number
HL820PN-8-8
- 8/16 or 1/2 Maximum Grip Length
- 8/32 or 1/4 Nominal Diameter Pin
- Finish Code
- Pin Basic Part Number

~~Pin and Collar Assembly Part Number Combination~~
~~HL82093-8-8~~
- ~~Size and Grip Length, See Above Example~~
- ~~Collar Part Number~~
- ~~Pin Part Number~~

** The Double Shear values shown are based on cross sectional area for nominal diameter pin.

"HI-LOK", "HL", AND "HI-KOTE", ARE TRADEMARKS OF HI-SHEAR CORPORATION

| DRAWN BY | DATE | TITLE |
|---|---|---|
| VAN | 1971-07-21 | HI-LOK™ PIN<br>PROTRUDING TENSION HEAD<br>ALLOY STEEL<br>1/16 GRIP VARIATION, 1/32 OVERSIZE |
| APPROVED<br>T. TING | DATE<br>1971-07-22 | |
| REVISION<br>4 | DATE<br>M.BEARD<br>2017-11-15 | DRAWING NUMBER<br>**HL820**<br>1 OF 1 |

HL820

©2017 Hi-Shear Corporation