LISI AEROSPACE – Please refer to Central Documentation Website to check validity

**STANDARDS COMMITTEE FOR HI-LOK® PRODUCTS**
2600 SKYPARK DRIVE, TORRANCE, CALIFORNIA 90509

HI-SHEAR CORPORATION (Patent Holder) — Federal Code Ident. No. 73197
VOI-SHAN DIV., VSI CORP. (Licensee) — Federal Code Ident. No. 92215
STANDARD PRESSED STEEL CO. (Licensee) — Federal Code Ident. No. 56878

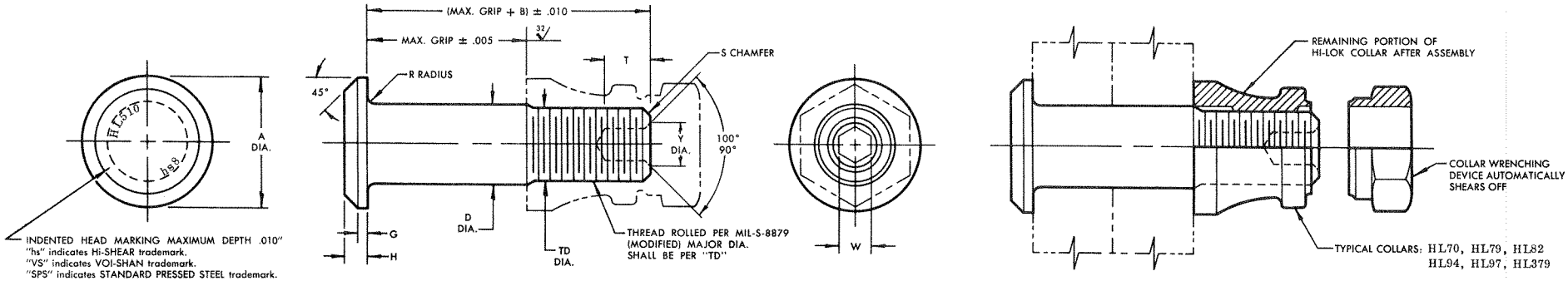


HI-LOK PIN

HI-LOK PIN AND COLLAR AFTER ASSEMBLY

| FIRST DASH NO. | NOM. DIA. | A DIA. | B REF. | D DIA. | TD DIA. | G REF. | H | R RAD. | S CHAMFER REF. | THREAD | SOCKET W HEX. | SOCKET T DEPTH | SOCKET Y DIA. | DOUBLE SHEAR POUNDS MINIMUM ** | TENSION POUNDS MINIMUM |
|---|---|---|---|---|---|---|---|---|---|---|---|---|---|---|---|
| ** –5 | 5/32 | .262<br>.242 | .312 | .1635<br>.1625 | .1595<br>.1570 | .020 | .047<br>.037 | .025<br>.015 | 1/32" x 45° | 8-32UNJC-3A Modified | .0645<br>.0635 | .135<br>.115 | [5] | 4,010 | 1,940 |
| –6 | 3/16 | .315<br>.295 | .325 | .1895<br>.1885 | .1840<br>.1810 | .025 | .055<br>.045 | .025<br>.015 | 1/32" x 45° | 10-32UNJF-3A Modified | .0806<br>.0791 | .135<br>.115 | .119<br>.104 | 5,380 | 2,500 |
| –8 | 1/4 | .412<br>.387 | .395 | .2495<br>.2485 | .2440<br>.2410 | .030 | .069<br>.059 | .025<br>.015 | 1/32" x 45° | 1/4-28UNJF-3A Modified | .0967<br>.0947 | .150<br>.130 | .142<br>.122 | 9,300 | 4,300 |
| –10 | 5/16 | .505<br>.475 | .500 | .3120<br>.3110 | .3060<br>.3020 | .035 | .078<br>.068 | .030<br>.020 | 3/64" x 45° | 5/16-24UNJF-3A Modified | .1295<br>.1270 | .170<br>.150 | .180<br>.160 | 14,600 | 6,300 |
| –12 | 3/8 | .600<br>.565 | .545 | .3745<br>.3735 | .3680<br>.3640 | .040 | .088<br>.078 | .030<br>.020 | 3/64" x 45° | 3/8-24UNJF-3A Modified | .1617<br>.1582 | .200<br>.180 | .217<br>.197 | 21,000 | 8,700 |
| –14 | 7/16 | .676<br>.641 | .635 | .4370<br>.4360 | .4310<br>.4260 | .045 | .105<br>.093 | .030<br>.020 | 3/64" x 45° | 7/16-20UNJF-3A Modified | .1930<br>.1895 | .230<br>.210 | .253<br>.233 | 28,600 | 12,100 |
| –16 | 1/2 | .770<br>.735 | .685 | .4995<br>.4985 | .4930<br>.4880 | .050 | .115<br>.103 | .030<br>.020 | 3/64" x 45° | 1/2-20UNJF-3A Modified | .2242<br>.2207 | .260<br>.240 | .289<br>.269 | 37,300 | 15,300 |

SEE COLLAR STANDARDS FOR COLLAR STRENGTHS. LOWER STRENGTH (PIN OR COLLAR) DETERMINES SYSTEM STRENGTH.

**① HL510 IS NOT RECOMMENDED. FOR FUTURE PROCUREMENT USE HL510AZ OR HL10VAZ.**

GENERAL NOTES:
1. Concentricity: "A" to "D" diameter within .010 FIR.
2. Dimensions to be met after plating.
3. Surface texture per ANSI B46.1.
4. Hole preparation per NAS618.
5. Evidence of broken edge across points.

MATERIAL: 6Al-4V titanium alloy per Spec. AMS4928 or AMS4967.

HEAT TREAT: 95,000 psi shear minimum.

FINISH: HL510-( )-( ) = ~~Type II, Class 2 cadmium plate with color code red on thread end plus cetyl alcohol lube per Hi-Shear Spec. 305.~~
HL510AZ-( )-( ) = Hi-Kote 1 aluminum coating per Hi-Shear Spec. 294 with color code black on thread end and cetyl alcohol lube per Hi-Shear Spec. 305.

SPECIFICATION: Hi-Lok Product Specification 342.

① CODE: First dash number indicates nominal diameter in 32nds. Second dash number indicates maximum grip in 16ths. See "FINISH" note for explanation of code letters.

HOW TO ORDER EXAMPLES:

Pin Part Number Only
HL510AZ-8-8
- 8/16 or 1/2 Maximum Grip Length
- 8/32 or 1/4 Nominal Diameter Pin
- Pin Part Number

Pin and Collar Assembly Part Number Combination
HL510AZ70-8-8
- Size and Grip Length, See Above Example
- Collar Part Number
- Pin Part Number

** -5 size must be installed using a torque controlled hex key.

U.S. patents 2,882,773; 2,927,491; 2,940,495; 3,027,789; 3,138,987; design patent 191,883; other U.S. and Foreign patents granted and pending; property of Hi-Shear Corporation. "Hi-Lok" and "HL" are Registered Trademarks of Hi-Shear Corporation.

| DRAWN | DATE | hi-lok® PIN |
|---|---|---|
| D. SHRODE | 1-25-67 | PROTRUDING SHEAR HEAD TITANIUM 1/16" GRIP VARIATION ① |
| APPROVED J. Miller | DATE 1-27-67 | |
| REVISION 8 | DATE D. P. S. 12-14-78 | DRAWING NUMBER HL510 |

HL510

2-1501

© 1978, Hi-Shear Corporation