LISI AEROSPACE – Please refer to Central Documentation Website to check validity

# STANDARDS COMMITTEE FOR HI-LOK® PRODUCTS

2600 SKYPARK DRIVE, TORRANCE, CALIFORNIA 90509 U.S.A.

| | | |
|---|---|---|
| HI-SHEAR CORPORATION, U.S.A. | (Patent Holder) | CAGE No. 73197 |
| Division of Hi-Shear Industries Inc., U.S.A. | | |
| AIR INDUSTRIES CO., INC., U.S.A | (Licensee - U.S.& Canada) | CAGE No. 06725 |
| HUCK INTERNATIONAL, INC., Deutsch Operation, U.S.A | (Licensee) | CAGE No. 97926 |
| SPS TECHNOLOGIES, U.S.A. | (Licensee) | CAGE No. 66678 |
| FAIRCHILD Aerospace Fastener Division, U.S.A | (Licensee) | CAGE No. 92215 |
| WEST COAST AEROSPACE INC., U.S.A (Pins & Steel Collars) | (Licensee) | CAGE No. 60516 |

| | | |
|---|---|---|
| Hi-SHEAR FASTENERS EUROPE, LTD., U.K | (Licensee) | CAGE No. OLB68 |
| Division of Hi-Shear Industries Inc., U.S.A. | | |
| HUCK INTERNATIONAL GMBH & CO., Germany | (Licensee - EEC Countries) | |
| SAINT CHAMOND GRANAT, S.A. France | (Licensee - EEC Countries) | |
| SIMMONDS S.A., France | (Licensee - EEC Countries-Collars) | |
| TOKYO SCREW COMPANY, Japan | (Licensee - Japan) | |

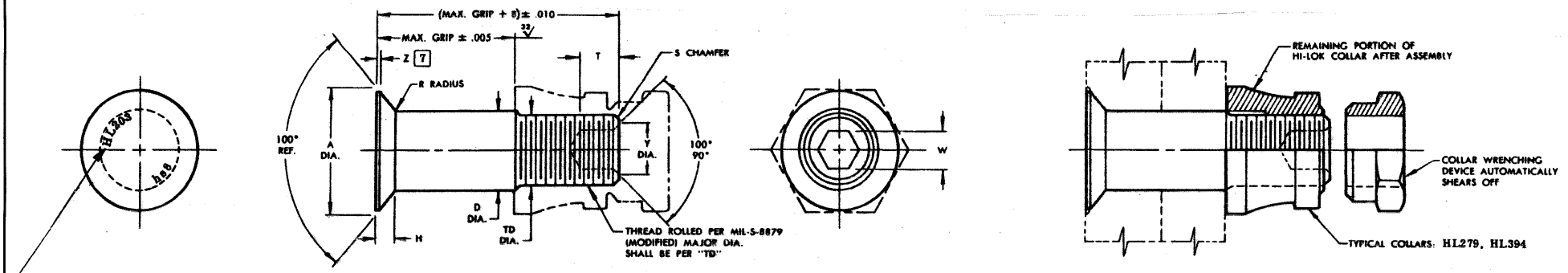


INDENTED HEAD MARKING MAXIMUM DEPTH .010. Mnufacturer's trademark per Hi-Shear Spec. 363. The number(s) following the trademark indicate first dash number. Arrangement optional. ⑧

HI-LOK PIN

HI-LOK PIN AND COLLAR AFTER ASSEMBLY

| FIRST DASH NO. | NOM. DIA. | A DIA. | B REF. | | D DIA | TD DIA. | F [1] | H | R RAD. | Z [7] MAX. | S CHAMFER REF. | THREAD | SOCKET W HEX. | SOCKET T DEPTH | SOCKET Y DIA. | DOUBLE SHEAR POUNDS MINIMUM ** | TENSION POUNDS MINIMUM |
|---|---|---|---|---|---|---|---|---|---|---|---|---|---|---|---|---|---|
| 5 | | | | | | NOTE: Use HL219-6-( ) | | | | | | | | | | | |
| 6 | 15/64 | .3460<br>.3410 | .360 | | .2339<br>.2329 | .1840<br>.1810 | .005 | .0470<br>.0449 | .030<br>.020 | .015 | 1/32" x 45° | 10-32UNJF-3A Modified | .0806<br>.0791 | .135<br>.115 | .119<br>.104 | 8,160 | 2,000 |
| 8 | 19/64 | .4416<br>.4366 | .430 | | .2963<br>.2953 | .2440<br>.2410 | .006 | .0610<br>.0589 | .030<br>.020 | .015 | 1/32" x 45° | 1/4-28UNJF-3A Modified | .0967<br>.0947 | .150<br>.130 | .142<br>.122 | 13,100 | 3,700 |
| 10 | 23/64 | .5208<br>.5158 | .530 | | .3589<br>.3579 | .3060<br>.3020 | .007 | .0679<br>.0658 | .040<br>.030 | .015 | 3/64" x 45° | 5/16-24UNJF-3A Modified | .1295<br>.1270 | .170<br>.150 | .180<br>.160 | 19,200 | 5,000 |
| 12 | 27/64 | .6073<br>.6023 | .575 | | .4214<br>.4204 | .3680<br>.3640 | .008 | .0780<br>.0759 | .040<br>.030 | .015 | 3/64" x 45° | 3/8-24UNJF-3A Modified | .1617<br>.1582 | .200<br>.180 | .217<br>.197 | 26,500 | 7,200 |
| 14 | 31/64 | .7148<br>.7088 | .660 | | .4839<br>.4829 | .4310<br>.4260 | .009 | .0969<br>.0944 | .050<br>.040 | .022 | 3/64" x 45° | 7/16-20UNJF-3A Modified | .1930<br>.1895 | .230<br>.210 | .253<br>.233 | 34,900 | 10,000 |
| 16 | 35/64 | .8009<br>.7949 | .710 | | .5464<br>.5454 | .4930<br>.4880 | .010 | .1068<br>.1043 | .050<br>.040 | .022 | 3/64" x 45° | 1/2-20UNJF-3A Modified | .2242<br>.2207 | .260<br>.240 | .289<br>.269 | 44,600 | 13,500 |

**USE COLLAR STANDARDS FOR COLLAR STRENGTHS. LOWER STRENGTH (PIN OR COLLAR) DETERMINES SYSTEM STRENGTH.**

** The Double Shear Values shown are based on cross sectional area for nominal diameter pin.

**GENERAL NOTES:**
1. Head edge out of roundness shall not exceed "F".
2. Concentricity: Conical surface of head to "D" diameter within .005 FIR.
3. "H" is dimensioned from maximum "D" diameter.
4. Dimensions to be met after finish.
5. Surface texture per ANSI B46.1.
6. Hole preparation per NAS618.
7. Curved or flat edge manufacturer's option.

**MATERIAL:** Alloy steel per MIL-S-5000, MIL-S-5626 or MIL-S-6049.

**HEAT TREAT:** 95,000 psi shear minimum (160,000-180,000 psi tensile per MIL-H-6875).

**⑧ FINISH:** HL203-( )-( ) = Cadmium plate per QQ-P-416, Type II, Class 2, and cetyl alcohol lube per Hi-Shear Spec. 305.
HL203A-( )-( ) = Cadmium plate per AMS2400-3 and cetyl alcohol lube per Hi-Shear Spec. 305.

**SPECIFICATION:** Hi-Lok Product Specification 342.

**CODE:** First dash number indicates nominal diameter in 1/32nds of the pin which HL203 oversize pin replaces. Second dash number indicates maximum grip in 1/16ths. See Finish note for explanation of code letters.

**HOW TO ORDER EXAMPLES:**

Pin Part Number Only
HL203-8-8
- 8/16 or 1/2 Maximum Grip Length
- Replaces 8/32 or 1/4 Nominal Diameter Pin
- Pin Part Number with Type II Cadmium Plate

Pin and Collar Assembly Part Number Combination
HL203279-8-8
- Size and Grip Length, See Above Example
- Collar Part Number
- Pin Part Number

"Hi-Lok" and "HL" are internationally registered trademarks of Hi-Shear Corporation.

| DRAWN | DATE | TITLE |
|---|---|---|
| Brlej | 3-11-64 | HI-LOK® PIN |
| APPROVED | DATE | 100° FLUSH SHEAR HEAD<br>ALLOY STEEL |
| Cessna | 3-11-64 | 1/16" GRIP VARIATION, 3/64" OVS |
| REVISION | DATE | DRAWING NUMBER |
| ⑧ | J.F.Obispo 9-13-94 | HL203 |

HL203

2-1501

© 1994 Hi-Shear Corporation