LISI AEROSPACE – Please refer to Central Documentation Website to check validity

STANDARDS COMMITTEE FOR HI-LOK® PRODUCTS
2600 SKYPARK DRIVE, TORRANCE, CALIFORNIA 90509

HI-SHEAR CORPORATION (PATENT HOLDER) CODE IDENT. NO. 73197
VOI-SHAN INDUSTRIES, INC. (LICENSEE) CODE IDENT. NO. 92215

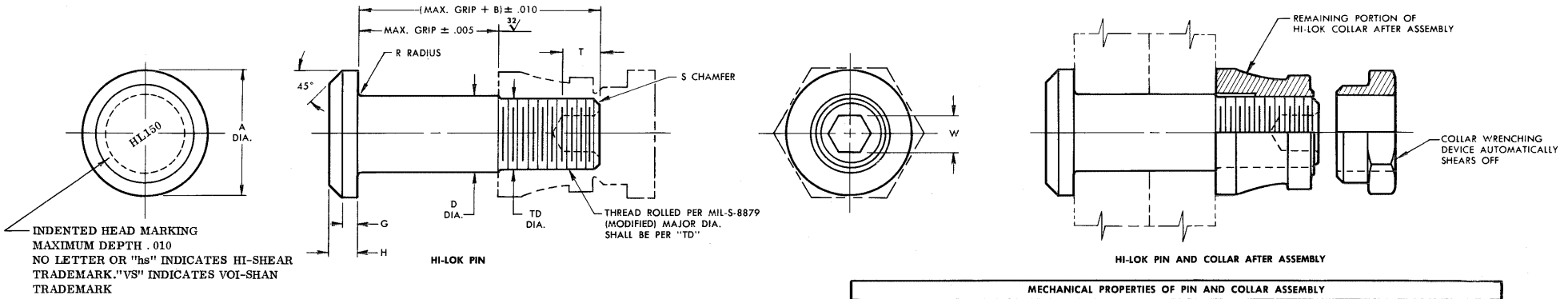

FIRST DASH NO.	NOM. DIA.	A DIA.	B REF.	D DIA.	TD DIA.	G	H	R RAD.	S CHAMFER	THREAD	SOCKET W HEX	SOCKET T DEPTH
–5	5/32	.262 .242	.312	.1635 .1630	.1595 .1570	.020	.047 .037	.025 .015	1/32" x 45°	8-32UNJC-3A Modified	.0801 .0791	.135 .115
–6	3/16	.315 .295	.325	.1895 .1890	.1840 .1810	.025	.055 .045	.025 .015	1/32" x 45°	10-32UNJF-3A Modified	.0806 .0791	.135 .115
–8	1/4	.412 .387	.395	.2495 .2490	.2440 .2410	.030	.069 .059	.025 .015	1/32" x 45°	1/4-28UNJF-3A Modified	.0967 .0947	.150 .130
–10	5/16	.505 .475	.500	.3120 .3115	.3060 .3020	.035	.078 .068	.030 .020	3/64" x 45°	5/16-24UNJF-3A Modified	.1295 .1270	.170 .150
–12	3/8	.600 .565	.545	.3745 .3740	.3680 .3640	.040	.088 .078	.030 .020	3/64" x 45°	3/8-24UNJF-3A Modified	.1617 .1582	.200 .180
–14	7/16	.676 .641	.635	.4370 .4365	.4310 .4260	.045	.105 .093	.030 .020	3/64" x 45°	7/16-20UNJF-3A Modified	.1930 .1895	.230 .210
–16	1/2	.770 .735	.685	.4995 .4990	.4930 .4880	.050	.115 .103	.030 .020	3/64" x 45°	1/2-20UNJF-3A Modified	.2242 .2207	.260 .240

MECHANICAL PROPERTIES OF PIN AND COLLAR ASSEMBLY

DOUBLE SHEAR POUNDS MINIMUM	ALUMINUM COLLARS * HL70 HL79 HL82 — TENSION LBS. MIN.			STEEL COLLARS * HL94 HL97 — TENSION LBS. MIN.		
5,280	1,400			1,940		
7,060	1,600			2,500		
12,260	3,000			4,300		
19,160	5,000			6,300		
27,600	7,000			8,700		
37,500	9,500			12,100		
49,100	12,500			15,300		

GENERAL NOTES:
1. Concentricity: Head to "D" diameter within .010 TIR.
2. Surface roughness per MIL-STD-10.
3. Hole preparation per NAS618.

MATERIAL: PH15-7Mo stainless steel per AMS-5657.

HEAT TREAT: 125,000 psi shear minimum.

FINISH: HL150-( )-( ) = Passivate per Hi-Shear Spec. 258.

SPECIFICATION: Hi-Lok Product Spec. 340, Section 12.

CODE: First dash number indicates nominal diameter in 1/32nds.
Second dash number indicates maximum grip in 1/16ths.

HOW TO ORDER EXAMPLES:

Pin Part Number Only
HL150-8-8
- 8/16 or 1/2 max. grip length
- 8/32 or 1/4 nominal dia. pin
- Pin part number

Pin and Collar Assembly Part Number Combination
HL15079-8-8
- Size and grip length, see above example
- Collar part number
- Pin part number

* SEE REFERENCE COLLAR STANDARDS PAGE FOR DETAIL DIMENSIONS.

U.S. Patents 2,940,495; 3,138,987; Design 191,883.
Other U.S. and Foreign Patents granted and pending.

DRAWN	DATE	hi-lok® PIN
Van	8-13-68	PROTRUDING SHEAR HEAD PH15-7Mo STAINLESS STEEL 1/16" GRIP VARIATION
APPROVED J. Mellen	DATE 8-13-68	
REVISION	DATE	DRAWING NUMBER HL150

HL150

2-1501

© 1968, Hi-Shear Corporation